FINAL

HYDROGEN COFIRE FEASIBILITY STUDY

Cheyenne Prairie Generating Station

B&V PROJECT NO. 412239
B&V FILE NO. 41.0000

PREPARED FOR

Black Hills Corporation

29 MARCH 2023

BLACK & VEATCH

Table of Contents

LIST OF TABLES

LIST OF FIGURES

Abstract

To advance the mission of the Wyoming Energy Authority (WEA) by driving technology and infrastructure investments, this paper will address the cofiring of hydrogen, in conjunction with natural gas, in a General Electric (GE) LM6000 PF combustion turbine (CT). Preliminary design and capital cost for the cofiring was developed in conjunction with GE using temporary trailers to supply the hydrogen to the CT. Beyond the demonstration of successful cofiring in the CT, which will be part of another phase of work, this paper also addresses the preliminary design and capital costs for the production of hydrogen using steam methane reforming (SMR) with carbon capture as well as electrolysis.

A maximum percentage blend of 35 percent by volume hydrogen was discussed with GE as an appropriate percentage for current testing purposes. Testing at this level needs to be completed prior to increasing the percentage of hydrogen. Output from the GE model required a maximum of 948 lb/hr hydrogen, or 10.3 tonne/day when operating at full load to maintain this 35 percent blend. This usage case was established as the design case for not only the necessary number of temporary trailers, but for the overall size of the on-site SMR (blue) and electrolyzer (green) hydrogen facilities needing to be built for permanent supply of the hydrogen to the CT.

Should testing of the hydrogen blending into the CT prove technically favorable, challenges exist regarding not only capital costs for on-site construction of both blue and green hydrogen, but also operational aspects for a hydrogen host which operates intermittently.

1.0 Introduction

Black Hills Corporation (BHC) is a utility company that serves over 1.28 million electric and natural gas customers across the North and Midwest. BHC owns or co-owns 16 power-generating facilities across Colorado, Wyoming, and South Dakota with an owned capacity of 875 megawatts (MW). Through their BHC subsidiary, Cheyenne Light, Fuel & Power (CLFP), which serves nearly 40,000 natural gas and electric customers in or near the Wyoming capital city, has worked with the WEA to assist with the design and/or construction of a pilot project demonstrating hydrogen production from renewable (green) or hydrogen with carbon capture and sequestration (blue) feedstock within the boundaries of Wyoming.

To advance the pilot project, CLFP proposed to develop a CT hydrogen utilization project intended to improve sustainability of current natural gas-fired generation in Wyoming and advance the understanding of how to combust Wyoming-derived hydrogen in turbines.

This phase of development includes the following scope:

- Ability to combust a hydrogen/natural gas blend of fuel, and necessary equipment modifications, within a Wyoming-based CT
- Feasibility for a natural-gas fed blue hydrogen gas generator with carbon capture
- Feasibility for a green hydrogen gas generator fed with renewable energy and water

CLFP offered their Cheyenne Prairie Generating Station (CPGS) Unit 2 General Electric (GE) LM6000 PF to demonstrate capability of burning a hydrogen blend fuel, as well as a location for the blue and green hydrogen gas generating facilities.

1.1 Objectives

It is understood that GE LM6000 technology has demonstrated flexibility in backing renewable generation from wind resources. The LM6000 PF CTs at the CPGS are routinely regulated in power output depending on the intermittent energy production from local Wyoming wind assets. These assets include the 52.5 MW Corriedale Wind Energy Facility owned by BHC, the 29 MW Happy Jack wind farm for which CLFP has a Power Purchase Agreement (PPA) for the entire 29 MW and the 42 MW Silver Sage wind farm for which BHC has a PPA for 30 MW of the output.

In an effort to reduce carbon dioxide (CO_2) emissions from the LM6000 PF CTs when supporting the intermittent energy production from the local Wyoming wind assets, CLFP is exploring the feasibility of adapting the CPGS Unit 2 LM6000 PF to burn a blend of hydrogen with natural gas. In using this unit as a proxy for other similar units, this unit could dispatch in a reduced CO_2 environment by blending hydrogen derived from off-peak renewable energy such as wind and solar energy, or by blending hydrogen derived from natural gas with the use of carbon capture.

The eventual rollout of a working CT with hydrogen blending capability is expected to result in further investment into hydrogen blending capability by original equipment manufacturers (OEMs), in turn creating additional demand for blue and green hydrogen production and use. These are both key components in the development of a Wyoming hydrogen hub.

The first objective is to understand the necessary modifications to the CPGS LM6000 PF, and the capital costs associated with the construction, to perform the temporary test burn of a hydrogen and natural

gas blend. The expected Wyoming economic impact resulting from the construction of the test burn facility will also be addressed, including employment, earned income, and purchase of materials and equipment within the State of Wyoming.

Subsequent objectives are to understand the costs associated with developing both a blue hydrogen production facility and a green hydrogen production facility in support of the CPGS LM6000 PF when burning a blend of hydrogen and natural gas.

1.2 Methods

Black & Veatch initiated the study efforts along with GE by identifying and analyzing CPGS Unit 2 operational characteristics. In discussions with GE, a maximum blend of 35 percent by volume was established as the maximum current appropriate percentage for the temporary test burn. CT operation at this blend percentage will need to be proven in a test burn prior to increasing the percentage of hydrogen. Using a site elevation of 5,934 ft, GE established the maximum hydrogen requirement as 948 lb/hr on a mass basis. This requirement was used to establish the number of temporary trailers necessary to complete the engine mapping and establish the potential impact to emissions.

The 948 lb/hr was used to establish the overall production size of the blue and green hydrogen production facilities. Each of these facilities was sized as 10.3 tonnes/day based on running the CT at maximum fuel requirement, maximum fuel blend of 35 percent by volume, and 24 hours of operation.

1.3 Results

Black & Veatch developed an analysis of the costs and time required to design, procure equipment, permit, construct, and commission a temporary test burn of hydrogen into the CPGS LM6000 PF, as well as for an on-site SMR production facility and an on-site electrolysis production facility of 10.3 tonnes/day. Black & Veatch developed a capital cost estimate along with a level 1 project schedule for each of the hydrogen usage cases.

Table 1-1 Results Summary

Technology	Test Burn	SMR with CCS	SMR with CCS and Pipeline	Electrolyzer
Usage or Production Size, kg/d	10,300	10,300	10,300	10,300
Est. Schedule (Months)	~17.5	~23.5	~23.5	~19
Capital Cost $MM	2.832	142.063	167.080	86.493

2.0 Technical Information

2.1 Temporary Test Burn Hydrogen Overview

During the temporary test burn of hydrogen in the CPGS LM6000 PF, gaseous hydrogen is delivered to site via a trailer of high-pressure gas cylinders. Trailers typically carry around 250-400 kg of useable hydrogen depending on the pressure, which can vary from around 165-500 barg (2,400-7,250 psig). While traditional tube trailers operate below 250 barg (3,625 psig) based on the weight limitation for an American Society of Mechanical Engineers (ASME) Type 1 storage vessel, higher pressure vessels are allowed by the Department of Transportation (DOT). These trailer types are becoming more available, but the traditional lower pressure types remain more common at this time. This study considers the use of the lower pressure vessels due to the number of required vessels and the limited availability of the higher pressure vessels.

Delivered gas solutions can operate by unloading the trailer into permanent storage on site or in a “drop and swap” configuration. The unloading option loses some efficiency by moving hydrogen from one storage type to another but avoids fees that may be associated with leaving the trailers at site. The “drop and swap” solution eliminates the need for bulk storage on-site. Regardless of configuration, the delivered gas solution is typically only feasible for smaller capacities.

Due to the temporary nature of the test burn, which is typically limited to a duration of a few weeks, this study considers the drop and swap configuration as the basis for design.

2.1.1 General Electric Overview

Black & Veatch initiated the study efforts along with CLFP and GE by identifying and analyzing the CPGS Unit 2 LM6000 PF CT operational characteristics. Current bench rig testing has yielded a maximum hydrogen blend percentage of 35 percent by volume. With a maximum output of approximately 40MW at 5,934 ft elevation, GE determined the 35 percent blend by volume will require 948 lb/hr, or 10.3 tonnes/day, of hydrogen on a mass basis to support operation at full load.

GE has co-fired hydrogen in other LM6000 CTs, most notably at the New York Power Authority (NYPA) Brentwood Power Station and the Sharm El Sheikh power plant in Egypt. In both these cases, the LM6000 consisted of a Singular Annular Combustor (SAC) in lieu of the Dry Low Emission (DLE) 1.5 combustors present in the CPGS unit. The SAC combustor is the original combustor technology for the LM6000 fleet and requires diluent water injection for nitrogen oxide (NO_X) control whereas the newer DLE1.5 combustors require no water for the control of NO_X as a product of combustion. This study uses the currently installed DLE1.5 as a basis of design. Although the CT could be retrofitted with SAC combustors, this was not considered due to package upgrades required for safe operation, increased water usage, and potential changes to the air permit.

For proper operation of the LM6000 PF, GE requires mapping of the DLE1.5 combustors for proposed operation of the CT, and has indicated this mapping has yet to be performed on any LM6000 PF to date. Mapping of the DLE1.5 will be more time consuming than mapping operations previously performed on a SAC combustor. GE has developed a preliminary test plan and would expect to assemble a detailed test plan should the temporary test burn move forward. The preliminary test burn is expected to be as follows:

- Blending System and Instrumentation Checkout

  - 6 hours (majority of time on natural gas)
- Mapping ABC mode (1.5M scf H_2)
  - 21 hours (includes baseline mapping on natural gas, then re-mapping points with multiple H_2 blends)
- Mapping AB mode (1.0M scf H_2)
  - 21 hours (includes baseline mapping on natural gas, then re-mapping points with multiple H_2 blends)

GE anticipates mapping the LM6000 PF with blend percentages from 0-35 percent H_2 in increments of 5 percent in both the ABC mode and AB mode in order to fully map the engine.

Should the temporary test burn move forward, GE will conduct a site-specific design study on the LM6000 PF to provide a firm proposal defining all necessary modifications to reconfigure the CT for operation on a blend of hydrogen and natural gas. GE is unsure of necessary post-combustion emission control modifications at this time, and as such, it is understood that testing will proceed with a permit waiver.

Study scope for GE is anticipated to include the following:

- Blending/metering skid design and recommended location
- 3D scan of surrounding area for Unit 2
- Provide information to CLFP for supply input to blending/metering skid (pressure, temperature, flow)
- Provide information to CLFP on area classification changes around location of blending/metering skid
- CT enclosure analysis of existing instrumentation for area classification
- Evaluation of nitrogen purge requirements
- Provide information to CLFP on need for supply input to nitrogen purge skid
- Validate requirement for fuel system (material, pipe sizing, and instrument changes)
- Selection of gas properties analyzer
- Evaluation and identification of required changes to fire and gas system
- Validate requirement of required on-engine test instruments
- Provide performance estimates
- Provide information to CLFP on need for additional electric or air auxiliaries

Study scope for CLFP is anticipated to include the following:

- Supply and delivery of hydrogen and natural gas to the blending skid
- Provide hydrogen and natural gas which meet GE specifications
- Supply and delivery of nitrogen as needed
- Modification of existing natural gas line as needed

- Static mixer, check valves and tie-in point to natural gas line
- Civil works for new skids
- Interconnect wiring and piping for new skids
- PE stamps as required
- Obtain permits or waivers and notify grid authorities as needed
- Site HazOp study/review and analysis on balance of plant (BOP) equipment
- Data collection for emissions (will SCR and CO catalyst need to be modified for continual operation)
- Overall schedule and coordination of testing

2.1.2 Hydrogen Procurement Overview

Anticipating the use of 1.5M scf of H_2 for ABC mapping and 1.0M scf of H_2 for AB mapping, Black & Veatch engaged various hydrogen suppliers for the supply of high purity hydrogen for delivery in trailers for use in a drop and swap configuration.

Trailers are anticipated to originate from Henderson, Colorado and be delivered to CPGS, an approximate 100 mile delivery. Each trailer is expected to be 2,400 psi @ 70°F, holding a nominal 120,000 scf of hydrogen. With a minimum mixing pressure of 600-700psi for injection into the LM6000PF, we have anticipated that only 50 percent, or 60,000 scf, of the trailer volume is usable. Accounting for anticipated usage, the need for 25 trailers for ABC mapping and 17 trailers for AB mapping is expected. Although mapping, whether ABC or AB, is expected to take 21 hours, each trailer is scheduled to remain on-site for 14 days to accommodate load adjustments, downtime, trailer swaps and equipment calibrations. To maintain a constant hydrogen supply to the LM6000 PF, current configuration anticipates 3-4 trailers on site at any time. This is due to not only the logistics of the site but also the limitations on the availability of hydrogen trailers within the area.

2.1.3 Hydrogen Blending Emission Impacts

When hydrogen is blended with natural gas, the characteristics of the fuel are changed. Compared to natural gas, hydrogen is more energy dense on a gravimetric basis but less dense on a volumetric basis. Increased volumetric flow of the blended fuel will need to be delivered to the LM6000 PF to achieve the same heat input as the reference natural gas. Piping velocities and pressure losses will increase as a result. There are also additional considerations for the combustor nozzles with the higher velocities. GE will work on these issues as part of their study scope and test burn.

The primary driver for using hydrogen as an energy carrier is to reduce carbon footprint. However, CO_2 emissions are not proportionally decreased by an increase in volumetric hydrogen in the fuel. Due to the fact that carbon emissions are measured on a mass basis, consideration for the mass of carbon displaced by hydrogen needs to be considered. The correlation between blended hydrogen by volume and reduced CO_2 by mass can be calculated. Based on 35 percent by volume hydrogen blended into the CPGS LM6000 PF, a CO_2 reduction of approximately 15 percent is expected. As the reduction in CO_2 emissions requires the association of zero carbon intensity, the CO_2 reduction for SMR will be less, and based on the overall carbon capture rate. Figure 2-1 shows the CO_2 reduction vs hydrogen percent volume in the fuel assuming a complete reduction in carbon intensity.

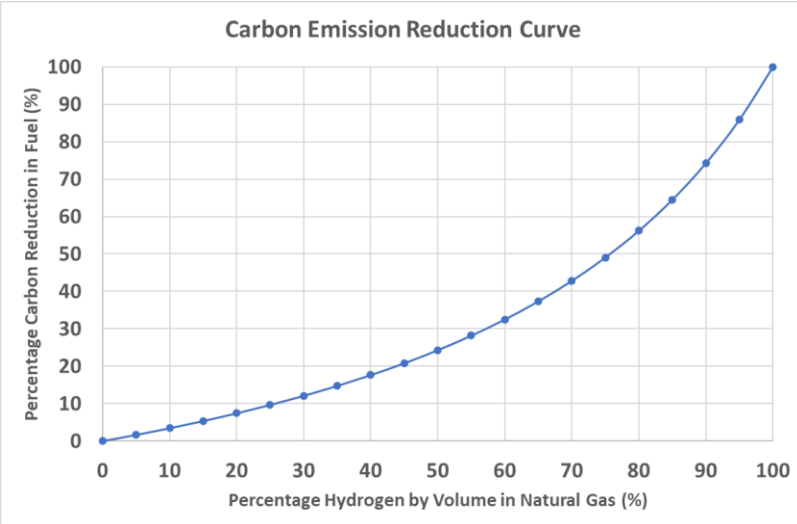

Figure 2-1 CO_2 Reduction vs. H_2 Percent Volume

Once GE has completed the site-specific design study and the hydrogen test burn on the CPGS Unit 2 LM6000 PF, complete emission information and profiles should be available.

2.2 SMR Overview

In the SMR process, natural gas first flows through a pre-treatment step to remove sulfur compounds that could poison the downstream catalysts. The pretreatment step typically consists of a vessel containing ZnO to adsorb H_2S, and a hydrolysis catalyst layer on top if COS is present. After pre-treatment, the natural gas mixes with steam and flows to the reformer. The reformer is the heart of the process and consists of catalyst-filled tubes suspended in a fired furnace. A schematic of this arrangement is shown in Figure 2-2.

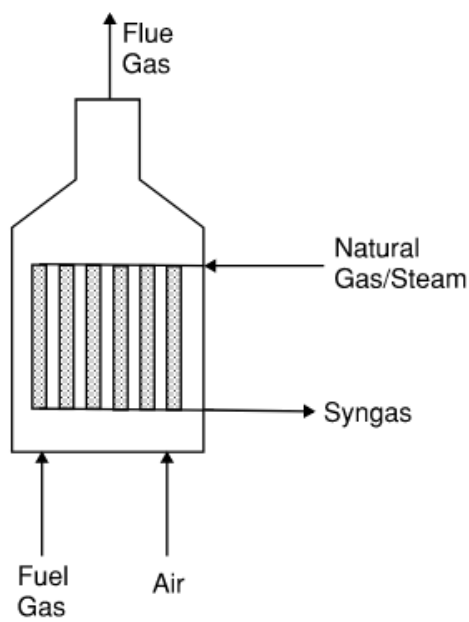

Figure 2-2 Steam Methane Reformer Arrangement

At the reformer, natural gas and steam react over a catalyst to produce hydrogen, carbon monoxide, and carbon dioxide at a temperature of 1400-1500°F. The reaction is endothermic with heat supplied by burners in the reformer. Heat is recovered from the exiting process gas through a waste heat boiler which produces steam.

The cooled process gas then flows to a water gas shift reactor where steam and carbon monoxide are converted to more hydrogen and carbon dioxide. The gas from the shift reactor is hot and can be used to produce more steam and preheat boiler feedwater. The gas is then cooled in a cooling water exchanger to drop out unreacted steam as process condensate which is recycled as boiler feed water to produce process steam.

Finally, the gas enters the pressure swing adsorption (PSA) unit where a hydrogen product stream is produced at the desired purity. The PSA tailgas, containing unreacted methane and some carbon monoxide and hydrogen, is recycled to the SMR burner as fuel gas. PSA units can be designed to reach a range of hydrogen purities up to 99.9999 percent.

Hydrogen produced at the SMR must be compressed to the bulk storage pressure, which is around 275 barg (4,000 psig). The total bulk storage capacity is sized to meet the design demand for a single day.

SMR units are less operationally flexible than electrolysis for on-site hydrogen production due to the longer start-up and shut-down times required. SMR turndown is also typically limited to around 60 percent. Depending on size, the units require a consistent hydrogen demand or additional considerations for bulk storage sizing to match variable demand profiles of a power plant dispatched in a peaking scenario.

2.2.1 Technology Overview

Black & Veatch has recent budgetary quotes for an SMR-based hydrogen generation, compression, and storage packages to produce and store high purity hydrogen at a nominal rate of 10,300 kg/d, or 10.3 tonnes/day, including with and without carbon capture. Refer to Figure 2-3 for a block flow diagram describing the scope of supply under consideration.

The SMR scope of supply under consideration is expected to meet the applicable codes and standards for service. The CAPEX components and costs are described in Section 4.0 of this report.

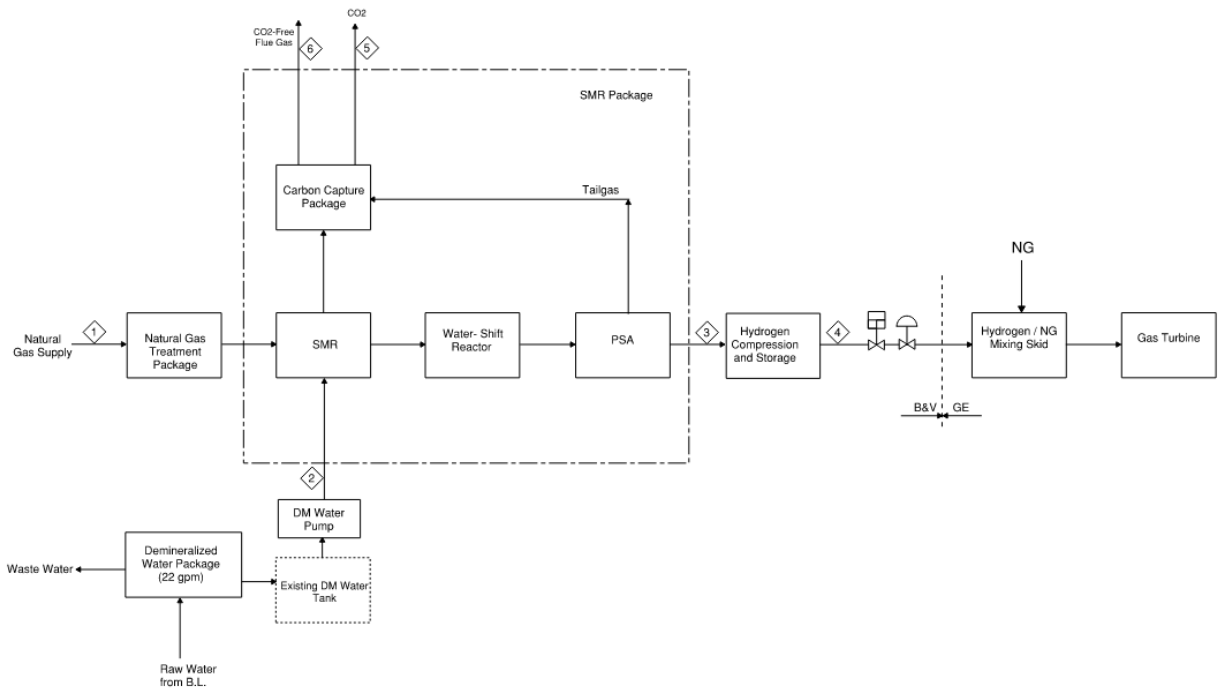

Figure 2-3 SMR Block Flow Diagram

2.2.1.1 Scope of Supply

The scope of supply is expected to include the following:

- Natural gas feed compression
- SMR hydrogen generation
  - Water treatment system
  - Natural gas pretreatment system
  - Hydrogen SMR generator
  - Hydrogen purification
  - Hydrogen surge vessel
- Hydrogen compression
- Hydrogen storage
- Control system for packaged equipment
- MCC and power distribution rack (for installation in nonhazardous location)
- Amine carbon capture system
- CO_2 gas compression
- Control room
- Balance of Plant:
  - Interconnecting pipe, valves, fittings

- Structural supports
- Instrumentation
- Transformer

2.2.1.2 Carbon Capture Overview

There are two sources of CO_2 in the SMR process: the flue gas from the reformer burners and the process itself where CO_2 is a product of the reactions that also generate hydrogen. CO_2 can be removed from the process gas at the PSA. Nearly 100 percent of the CO_2 in the process gas is removed in this case. CO_2 can also be removed from the reformer flue gas. Since the tailgas from the PSA unit is used as fuel gas, CO_2 generated from the process will also be emitted with the flue gas; however, since the flue gas stream is at a lower pressure only about 85-95 percent of the CO_2 is removed. In either case, a regenerable amine solvent is used to remove the CO_2.

This study considered CO_2 is captured from both the reformer flue gas and the process gas.

2.2.2 Carbon Sequestration Overview

Black & Veatch worked with CLFP and Tallgrass Energy (Tallgrass) based in Lakewood, Colorado to identify a path to CO_2 sequestration. Tallgrass has completed its initial feasibility study for sequestration in the greater Cheyenne area utilizing available well logs, regional geological studies, and seismic data. Based on this data, Tallgrass has determined that sequestration for the CO_2 production associated with decarbonized hydrogen production to support the CPGS is viable in the region. Through additional funding Tallgrass received from the WEA under a separate funding opportunity, Tallgrass will drill a characterization well in early 2023 in the region to further establish the sequestration capacity of the target injection formations. Tallgrass is also in the process of preparing a Class VI injection permit to enable the storage of CO_2 from the production of hydrogen and other potential emission sources in the region.

To transport the CO_2 generated from the hydrogen production near the CPGS to the sequestration site, Tallgrass will utilize its Trailblazer pipeline which will be converted from natural gas service to CO_2 service, as shown in Figure 2-4. In this scenario, Tallgrass has contemplated a hydrogen plant in the area of the CPGS plant, but not directly on the CPGS property, for supply of hydrogen to CPGS.

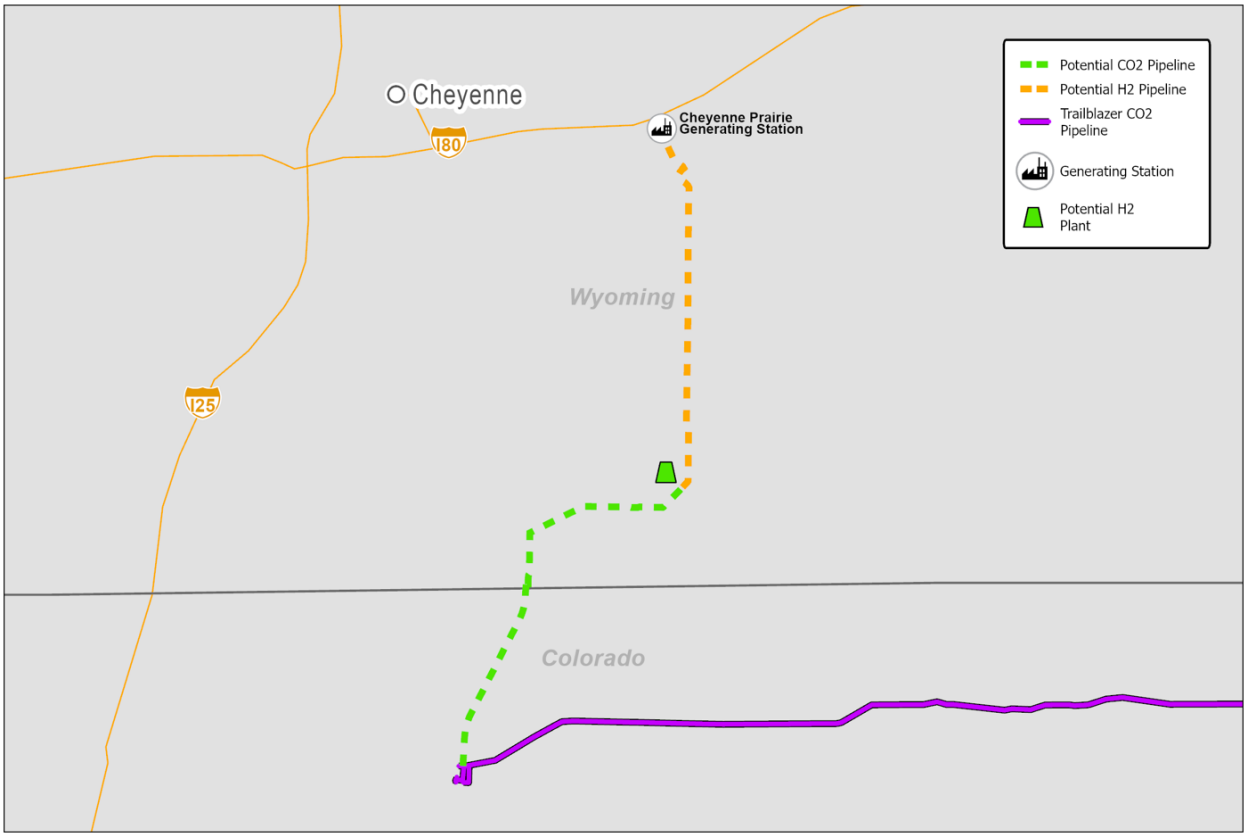

Figure 2-4 Trailblazer CO_2 Pipeline Location

Tallgrass is currently conducting feasibility studies for the production of decarbonized hydrogen utilizing both SMR and autothermal reforming processes utilizing carbon capture technology. The ultimate production process that will be utilized in the region will depend on the results of the FEED studies and the size of the end-use hydrogen market.

While the production of hydrogen within the region of GPGS is feasible, this study considers the production of hydrogen on-site of the CPGS. As the production of 10.3 tonnes/day hydrogen through the SMR process yields 9,830 lb/hr of CO_2, compression to 1,000 psi is necessary to transport the CO_2 from the termination of the amine-based carbon capture system at CPGS through an approximate 15-mile, 4-inch stainless steel pipeline for termination at the Tallgrass REX Exchange Hub for final injection into the Trailblazer pipeline near Carr, Colorado. Figure 2-5 provides preliminary pipe routing for the transportation of CO_2, and remains the basis of the cost estimate.

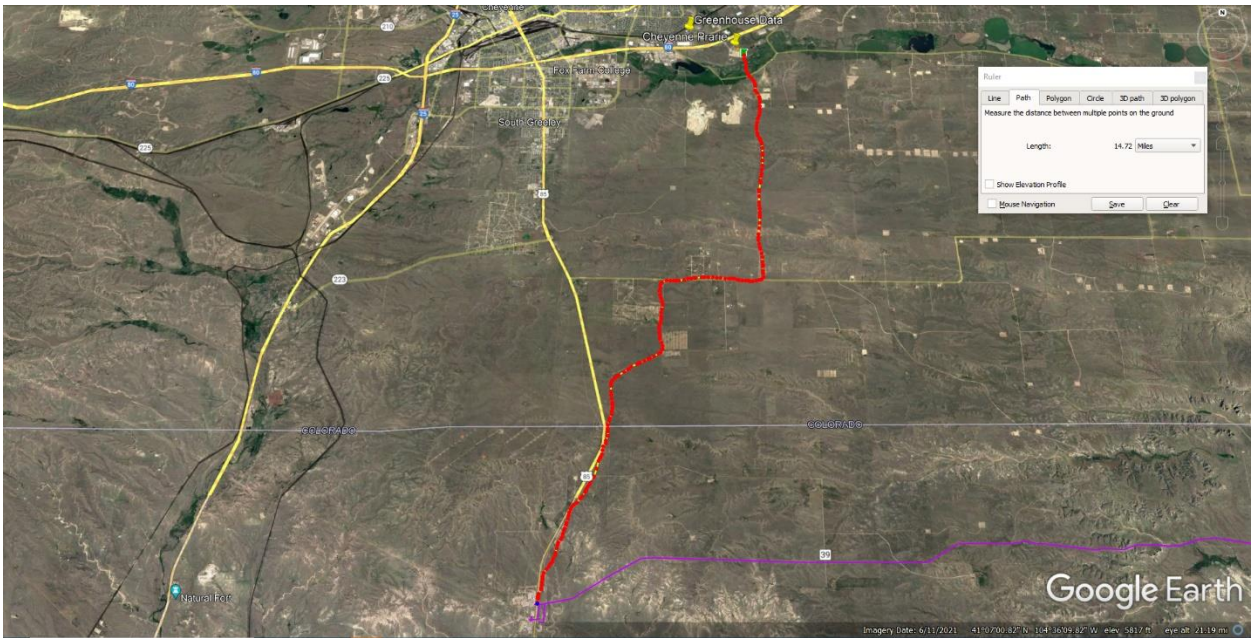

Figure 2-5 Proposed CO_2 Pipeline Route

2.3 Electrolysis Overview

Electrolysis is the process of splitting water into hydrogen and oxygen using electricity in an electrochemical cell. Electrolyzers come in a variety of capacities and chemistries, but the fundamental concept remains the same. Electrolyzers, like fuel cells, have electrodes (i.e., anodes and cathodes) separated by an electrolyte. The combination of electrodes and electrolyte vary by the type of chemical reactions taking place. Unlike SMR for hydrogen production, electrolyzers are considered “green” sources of hydrogen when the electricity consumed is provided by a renewable energy resource. Instead of using carbon as an energy carrier, electrolysis-derived hydrogen uses the splitting and combining of water. For this study, two types of electrolyzers were initially examined: Proton Exchange Membrane (PEM) and Alkaline Water Electrolysis (AWE).

2.3.1 Proton Exchange Membrane Electrolyzers

As the name suggests, PEM electrolyzers exchange a proton through the electrolyte between the electrodes. In a PEM electrolyzer, water is split into oxygen and hydrogen, with the hydrogen ions traveling from the anode to the cathode and exiting out the cathode side of the stack. Oxygen, in turn, exits out of the anode side of the stack. Catalysts help lower the activation energy required for the splitting of water. Recent research and development initiatives have optimized the catalytic activity of the cell while minimizing the amount of expensive electrocatalysts, thereby lowering the cost. Figure 2-6 below shows a schematic representation of a PEM electrolyzer.

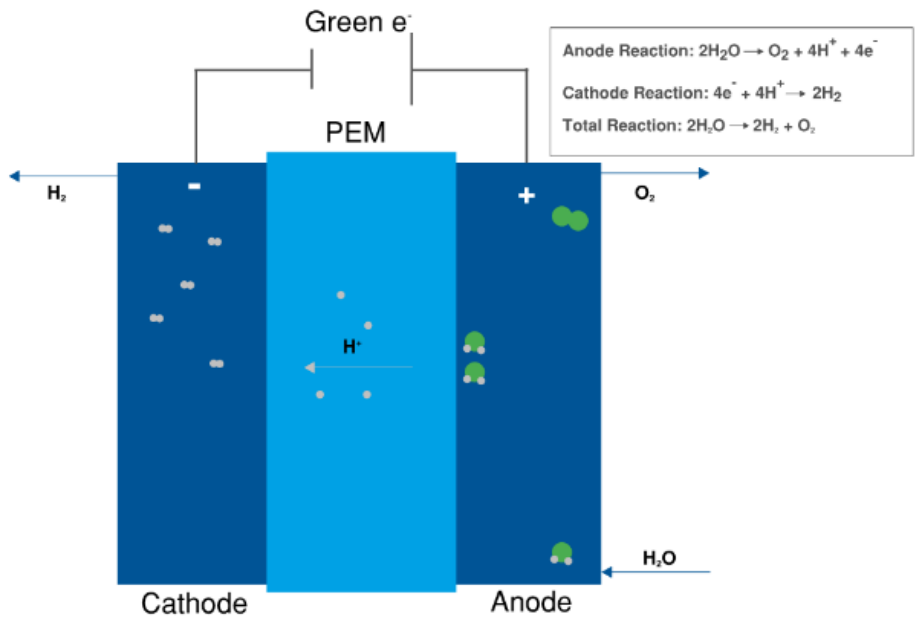

Figure 2-6 Diagram of a PEM Electrolyzer

2.3.2 Alkaline Water Electrolysis

Alkaline water electrolyzers fundamentally function similarly to PEM electrolyzers; however, the ion transported in the electrolyte is OH^- and travels from the cathode to the anode. The hydrogen then exits out the cathode side of the stack and the oxygen exits out of the anode side of the stack. Since AWEs have a lower current density, they also require a larger footprint compared to PEMs. However, the technology is considered to be more mature for large-scale hydrogen production. Figure 2-7 shows a schematic of an AWE system.

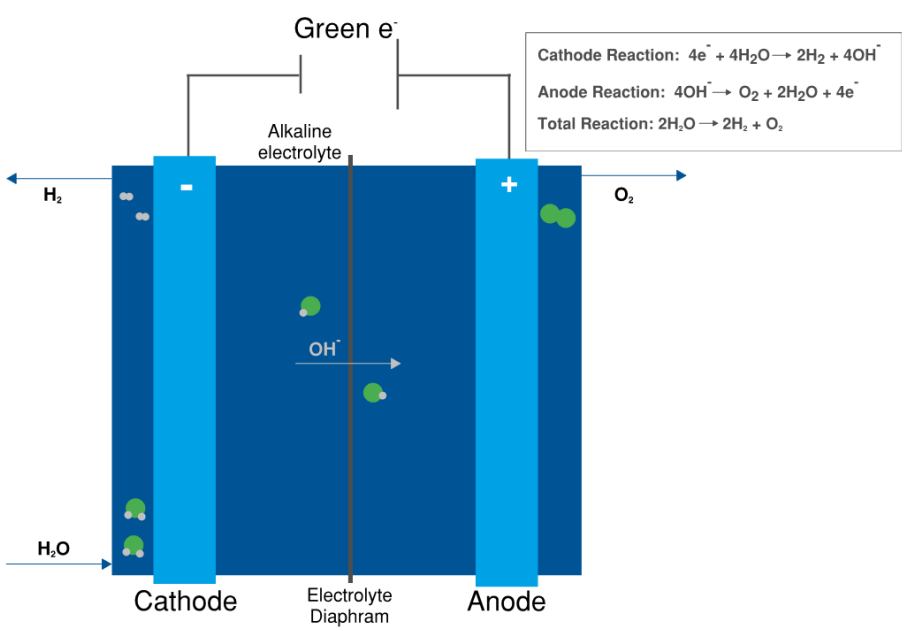

Figure 2-7 Diagram of an AWE Electrolyzer

2.3.3 Technology Overview

Provided the electrolyzer supports the production of 10,300 kg/d, or 10.3 tonnes/day of high purity hydrogen for blending into the LM6000 PF, the PEM electrolyzer is more suitable for this range of hydrogen generation, as the AWE electrolyzer is more suitable for larger generation applications. Therefore, for this study, the PEM was used as the basis of design and cost estimate.

Deoxygenation and dehydration units are typically included downstream of the electrolyzer stacks to remove oxygen and water that carries over with the product hydrogen to purities up to 99.999 percent. As the operational characteristics of the LM600 PF is similar for electrolysis as it is for SMR, the produced hydrogen must be compressed to the bulk storage pressure, which is around 275 barg (4,000 psig). The total bulk storage capacity is sized to meet the design demand for a single day.

Electrolyzer stacks are typically packaged together in skids or modules to meet a certain rating. Electrolyzers offer more operational flexibility for on-site hydrogen generation compared to SMR because of their shorter start-up and shut-down times. Additionally, PEM electrolyzer units can typically turn down to 10 percent. These features allow electrolyzer units to better track with a variable hydrogen demand or to operate during non-peak hours to run on lower cost electricity.

Black & Veatch has recent experience with electrolyzer-based hydrogen generation, compression, and storage packages to produce and store high purity hydrogen at a nominal rate of 10,300 kg/d, or 10.3 tonnes/day. Refer to Figure 2-8 for a block flow diagram describing the scope of supply under consideration.

The PEM scope of supply under consideration is expected to meet the applicable codes and standards for service. The CAPEX components and costs are described in Section 4.0 of this report.

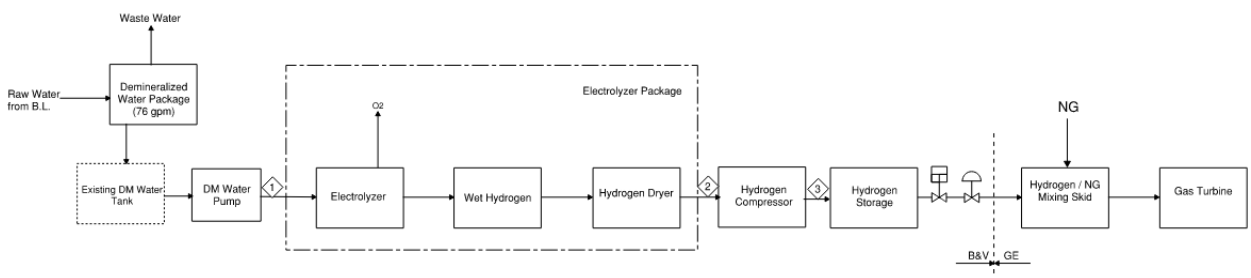

Figure 2-8 Electrolyzer Block Flow Diagram

2.3.3.1 Scope of Supply

The scope of supply is expected to include the following:

- Electrolyzer (containerized)
  - Proton Exchange Membrane (PEM) type
  - Hydrogen purity meets SAE J2719
  - Water treatment system
  - Instrument air system
  - Electrolyzer rectifiers and transformer
- Cooling system for electrolyzer

- Hydrogen compression
- Hydrogen storage
- Instrumentation and control system
- Interconnecting piping
- Instrumentation and control wiring
- Field installation of supplied equipment, piping, instrumentation, conduit, cable and components
- Underground piping between supplied equipment
- Nitrogen supply
- Wastewater collection and piping
- Electrical wiring between PDC, rectifiers and transformers
- Equipment foundations
- Control room

2.4 Hydrogen Storage Options

Operation of the Unit 2 LM6000 PF at CPGS fluctuates from zero generation to multiple days of generation at full load during the peak season of electricity usage. Because of the fluctuating nature of dispatch, there is a need to store the hydrogen for later use when Unit 2 is called to run. Since hydrogen is the lightest element, it can be challenging to store large quantities. Methane is about eight times denser than hydrogen at standard conditions, so the pressures and temperatures required to store hydrogen in an economical manner are more extreme than that of natural gas. The storage options outlined below were considered with respect to current market conditions.

2.4.1 Compressed Hydrogen Storage

Compressed hydrogen storage is the most common method of storage for today's industrial hydrogen consumers. Depending on the amount of hydrogen being stored, pressures can range from 2,000 to 10,000 psig with the high end of this range more suitable for small cylinders used in the transportation sector rather than large bulk tanks for industrial users. Depending on the pressure and storage volume, many smaller vessels may be more economical than one large bulk tank. Hydrogen also presents an issue with leakage. Some compressed storage applications may require special materials to line the inside of the vessel to prevent leakage.

Generally, compressed hydrogen storage is more economical for short, cyclical storage requirements.

2.4.2 Liquefied Hydrogen Storage

Hydrogen liquefaction is more energy intensive than compressed storage. However, depending on the amount of hydrogen storage needed, it can be an attractive option. Consider the density of liquefied hydrogen compared to compressed hydrogen: liquefied hydrogen density is approximately 4.42 $\frac{\text{lbm}}{\text{ft}^3}$ while compressed hydrogen density ranges from 0.16 to 3.12 $\frac{\text{lbm}}{\text{ft}^3}$, depending on the pressure. The storage volumes for liquefied hydrogen would be much smaller than the storage volumes for compressed hydrogen for the same amount of mass. However, liquefied hydrogen requires more complicated auxiliary equipment.

To liquefy hydrogen, extremely cold temperatures (i.e. -423°F) need to be maintained, which is only about 37°F above absolute zero. A vapor-compression cycle with liquid nitrogen as a refrigerant is required to achieve such temperatures. Boil-off compressors are also required to re-liquefy the hydrogen that will boil off while being stored. However, depending on the scale of storage required, liquefaction can still be more economical than compressed storage, particularly at large scales.

An additional consideration with the liquefaction equipment is the thermal cycling and ramp time. Cycling from ambient to the extremely low temperature thermally stresses the equipment. The equipment associated with liquefaction is designed for only so many thermal cycles over its lifetime and frequent cycling will significantly reduce the useable life of the equipment. Ideally, the liquefaction equipment is run continuously to minimize thermal cycles and maximize the life of the equipment. Additionally, the startup/shutdown times associated with the liquefaction train are estimated to be in the 4 to 8 hour range. Liquefaction is best suited for continuous operation or seasonal operation at a minimum. Daily cycling of the liquefaction equipment is not considered feasible; however, designing a system for very low turndown may offer some additional operating flexibility.

2.4.3 Geophysical Hydrogen Storage

Another method to store hydrogen takes advantage of existing geological formations. Geological formations such as salt caverns, rock caverns, and depleted gas fields present an opportunity to store large volumes of hydrogen in existing features. Conceptually, hydrogen is compressed and stored in an existing geological formation and then withdrawn for later use. The details of this concept are extremely site specific.

Salt caverns present the most suitable geological storage feature followed by rock caverns and then depleted gas fields as the least suitable of the three. Since hydrogen is the lightest gas, it has the fastest molecular velocity compared to any other gas at the same conditions. Depending on the geological feature, upgrades such as a liner may need to be added to prevent leakage. Another consideration associated with geological storage is contamination. Depending on the geological formation, other compounds such as methane or water may be present. Additional clean up equipment may be required depending on the geographic location and the hydrogen user quality requirements.

Geophysical storage presents an attractive method to store large quantities of hydrogen for seasonal variations but is highly dependent on the location. Upgrades to the geological formation or additional clean up equipment may drive the effective cost above that of traditional compressed storage or liquid storage.

2.4.4 Pipeline Hydrogen Storage

Pipelines are the most cost efficient way to transport large quantities of hydrogen over long distances. There are currently approximately 1,600 miles of hydrogen pipelines installed in the US, primarily in the Gulf Coast region, which are predominantly owned/operated by major industrial gas companies. Hydrogen pipelines are considered mature technologies and can typically cost approximately up to 10 percent more than a traditional natural gas transmission pipeline. For dry hydrogen service, the use of carbon steel is perfectly acceptable for the typical temperatures/pressures associated with most hydrogen generation projects. In instances where corrosive contaminants or condensate are present, a stainless steel pipeline material would be selected instead, which can drive costs even higher.

2.4.5 Hydrogen Storage Overview

Considering the operation of the Unit 2 LM6000 PF at CPGS is intermittent, and supports the CLFP system when typically other units are out of service for an outage, or peak-season generation is necessary, storage is of a short, cyclical nature, and a large storage quantity is unnecessary and likely cost prohibitive in both capital and O&M costs. With a maximum hydrogen production of 10.3 tonnes/day, a preliminary storage volume of 10.3 tonnes/day allows for variance in the Unit 2 load and in the blue or green hydrogen production. During periods of low or no Unit 2 electric production, challenges may exist with the inability to sufficiently turn down the hydrogen production process, especially in the SMR case, with a nominal turndown to 60 percent. Turndown in the electrolysis can is less of an issue with a nominal turndown to 10 percent. In addition, starting and stopping the electrolysis process is more favorable than starting and stopping the SMR process.

In consideration of the storage quantity for both the SMR and Electrolysis cases, compressed hydrogen storage is the most cost effective storage mechanism at this time. Should the energy production of Unit 2 increase significantly, the storage volume and method of storage should be revisited.

To compress and store hydrogen for later use, a combination of compressors, heat exchangers, tanks, and balance of plant piping are required. The balance of capital and O&M costs needs to be optimized to determine the best means of compression. Lower pressure storage requires less power consumption to achieve the storage pressures, but at a cost of more tanks and a larger footprint to hold the same mass of hydrogen. Higher pressure storage requires more power consumption to achieve the storage pressures, but at the benefit of fewer tanks and lower footprint.

The use of large tanks for hydrogen storage typically limits pressures to approximately 2,500 psig, as tank wall thickness for greater pressures become infeasible. Small tube tanks are more easily manufactured and more manageable to transport and install, but have a much smaller storage volume. They are also less custom than the large tanks, and can be procured in higher pressures for fewer tanks and a smaller overall footprint. Another advantage of the hydrogen tubes is that they are much lighter than the large tanks. Even when stacked, the corresponding concrete foundation does not need to be nearly as thick/reinforced when compared to the large tank case. From this, small tube tanks at a pressure of 4,000 psig storage pressure was selected as the ideal pressure for maximizing useable hydrogen per tube.

Since the design usage pressure is 650 psig, the useable mass of hydrogen will be the difference between the density of hydrogen at the storage pressure and the density of hydrogen at the usage pressure. In this case, once storage has been depleted, the tanks are at 650 psig. In order to use hydrogen from a storage vessel below 650 psig, it will have to be recompressed. For the basis of this study and cost estimate, recompression has not been considered. Recompression is worth investigating during detailed design, especially if operation of Unit 2 were to change significantly.

3.0 Process Design Documents

Black & Veatch developed several process design documents to support objectives of this study.

3.1 Block Flow Diagram

Appendix A shows the process Block Flow Diagrams (BFDs) with required utilities for the following scenarios.

- Temporary Test Burn Hydrogen
- Blue Hydrogen SMR
- Green Hydrogen Electrolyzer

3.2 Equipment List and Material Balance

Appendix B provides preliminary equipment lists for the processes.

- Temporary Test Burn Hydrogen
- Blue Hydrogen SMR
- Green Hydrogen Electrolyzer

Appendix B also provides preliminary material balances for the processes.

- Blue Hydrogen SMR
- Green Hydrogen Electrolyzer

3.3 Utility Summary

Whereas SMR hydrogen production is derived from natural gas, electrolysis consumes electrical energy during the hydrogen generation process. For consideration of “green” production, the electrical energy is provided by a renewable energy resource. Due to the overall electrical requirements for electrolysis, Appendix C provides a preliminary electrical load list and one-line diagram for the Green Hydrogen Electrolyzer.

3.4 General Arrangement

For each process, the general arrangement drawings are shown in Appendix D.

- Temporary Test Burn Hydrogen
- Blue Hydrogen SMR
- Green Hydrogen Electrolyzer

4.0 Cost Estimate

4.1 Capital Cost

4.1.1 Estimate Execution Methods

The deliverable is an estimate developed utilizing estimating systems owned and licensed by Black & Veatch including Aspen Capital Cost Estimator (ACCE) ™ version 12 and MS Office Products ™.

This Basis of Estimate explains in detail the key components of the estimate including quantity development, material costs, productivity adjustments and labor wages rates. All allowances, assumptions, clarifications, and exclusions that were made in the development of the estimate are listed within this document.

The direct field costs in the estimate reflect a Subcontract execution strategy at a Brownfield location with overall Construction Management. The basis for the development of direct field labor is the Black & Veatch USGC Estimating Standard Unit Work Hours, adjusted to reflect site conditions. This scope includes through Mechanical Completion.

4.1.2 General Assumptions and Qualifications

- All costs are expressed in USD
- All costs are on a Q3 2022 basis
- Direct craft wage rates are based on recent work in and near Wyoming
- Construction productivity was developed using a Brownfield site basis
- All taxes and duties are excluded
- Construction utilities will be provided by Owner
- No modification to the existing site of scope is included
- No allowance has been included for all risk subcontractor liability insurance
- No consideration is made for the impact of COVID-19
- No allowance has been included for site remediation

4.1.3 Work Breakdown Structure

- The estimate work breakdown structure is by major construction discipline.

4.1.4 Basis Documentation

The estimate is based on the following key documentation:

- Equipment Lists
    - Temporary Test Burn Equipment List: 412239-0000-P0101A
    - SMR Equipment List: 412239-0000-P0101B
    - Electrolysis Equipment List: 412239-0000-P0101C

- Plot Layouts
  - Temporary Test Burn: 412239-0000-G2001
  - SMR: 412239-0000-G2003
  - Electrolyzer: 412239-0000-G2002

4.2 Direct Field Costs

4.2.1 Construction Execution Strategy

The Construction execution scenario is an overall site Construction Management and subcontract work executed over a 50-hour work week.

The construction scenario reflects a stick-built execution philosophy on a brownfield site. All work is to be completed while the existing plant is in operation with no consideration for work executed during a Turnaround or outage.

4.2.2 Labor Rate Basis

The labor rates at the construction site have been developed by Estimating based on recently executed construction projects in and near Wyoming with considerations to the unique scope of this project. An "all-in" labor rate including for both direct and indirect construction costs has been developed to encompass the following:

Included in Direct labor rate:

- Base Wage Rate
- Overtime Premiums
- Benefits and Burdens
- Per Diem

The subcontract rate utilized incorporating the costs listed above equates to:

- Temporary Test Burn Hydrogen: USD 40.08 per direct man hour
- Blue Hydrogen SMR: USD 45.37 per direct man hour
- Green Hydrogen Electrolyzer: USD 43.28 per direct man hour

In addition, the following indirects have been included for the site:

- Site Construction Services
- Construction Equipment
- Temporary Facilities
- Small Tools and Consumables
- Overhead and Profit
- Construction Management

The cost of the above indirects equates to the following:

- Temporary Test Burn Hydrogen: USD 67.44 per direct man hour
- Blue Hydrogen SMR: USD 66.46 per direct man hour
- Green Hydrogen Electrolyzer: USD 75.34 per direct man hour

4.2.3 Productivity

Productivity adjustments were developed based on details around the Wyoming area and further refined according to past construction projects. These adjustments have been applied to Black & Veatch's Standard Unit US Gulf Coast Work Hours and are intended to cover items which will affect craft labor productivity. A productivity buildup was completed specific to the site conditions to account for including craft availability, craft skills, climate and weather, specific site and project information, and overtime consequences.

Productivity adjustments were also included for the hydrogen storage vessels. These vessels will be delivered to site as skids, and productivity was adjusted to account for the labor required for setting and installing the skids rather than individual vessels.

4.2.4 Demolition

No demolition is included in this estimate.

4.2.5 Civil/Concrete/Architectural

4.2.5.1 Quantity Basis

All scope for the facility is based upon the documentation provided.

All underground civil pipe was identified by the project team. This includes wastewater, water, and natural gas lines (for SMR option only).

Foundations are based on the provided documentation in addition to past projects in the same location. Using the equipment models inside ACCE, concrete quantities for foundations were generated including for the related bulk item requirements for excavation, backfill, slide plates, anchors, form work, rebar, embeds, accessories and other miscellaneous scopes of work.

Electrical transformers at the facility have concrete firewalls and containment.

The majority of equipment is expected to use slab on grade foundations consistent with the Site Class and Seismic Design Category.

Bollards have been identified from the plots and included in the estimate for the delivered options.

Fencing has been identified and included for each option. Gravel has been included around the equipment inside the process areas. Concrete has been included for the site road.

4.2.5.2 Assumptions and Clarifications

- Concrete quantities include for overpour and waste
- It is assumed the existing site perimeter roads are adequate for requirements
- Any hydro-excavation, probing or exploratory work is by Owner

4.2.6 Structural Steel

4.2.6.1 Quantity Basis

- All t-post requirements were identified via the Plot Plan.

4.2.6.2 Assumptions and Clarifications

- All structural members are galvanized
- All steel is stick-built. No modules have been designed

4.2.7 Mechanical Equipment

4.2.7.1 Quantity Basis

The mechanical equipment estimate is based on the equipment list referenced in Section 4.1.4. Models were developed inside ACCE per the equipment type. The equipment specifications were used to develop installation hours.

The equipment excludes freight and vendor representatives. These costs are assessed as separate line items within the estimate.

4.2.8 Piping

4.2.8.1 Quantity Basis

All process pipe quantities were developed by Estimating utilizing the ACCE models and Plot Plan which had been marked up by the project team to identify the major interconnecting lines and geographic point for tie-ins. All tie-ins are assumed to be at the existing site battery limit. Any underground pipe (natural gas etc.) includes trenching. It is anticipated that all aboveground pipe will be shop fabricated, with the majority of pipe being below 2”.

Miscellaneous pipe accessories (shoes, guides, hangers, etc.), testing, non-process vents and drains, NDE, stress relief, PMI and hydro-testing up to mechanical completion have been included by Estimating.

4.2.8.2 Assumptions and Clarifications

- Small bore pipe is 2” and smaller
- Hydro-test water or other testing mediums are to be provided and disposed of by the Owner
- Insulation has been included on above ground pipe as appropriate to the process design and will be insulated with calcium silicate and aluminum jacketing
- All carbon steel piping and uninsulated stainless-steel piping will be shop painted with one primer coat and one finish coat. This is included in the material cost in the piping account. Manhours are included for field touchup painting

4.2.9 Electrical

4.2.9.1 Quantity Basis

Estimating developed the bulk material quantities for the electrical scope of work based on the loading information provided by the Project team via the Equipment List. A preliminary one-line diagram has been developed for the electrolysis process due to the expected energy usage. Any requirements for new Electrical equipment and connections to existing power sources has been identified on the plot plan.

All cable will be installed above ground in cable tray/channel and terminated with a suitable cable gland. The only exception is the main plant feeder for the electrolysis process which will run underground from the site battery limit to a new transformer.

Local pushbutton control stations are included in the estimate for each pump motor control. Cable tray quantities were developed using the plot plan and through discussions with the Project team.

Lighting and grounding are included based on the area sizing and assumed luminaire requirements. All lights will be LED.

4.2.9.2 Assumptions and Clarifications

- The area classification is assumed Class 1 Div 2
- Owner will provide utility power for the new facility
- No costs have been included for upgrades to the existing site power infrastructure for SMR. It is assumed that suitable capacity is available
- Armored cable is used for high, medium, and low voltage cable as directed by the Project Team
- Communication and security systems are excluded. These items are assumed to be existing at the current facility.

4.2.10 Control Systems

4.2.10.1 Quantity Basis

All tagged instruments are included by Estimating as part of the ACCE default P&IDs which generated the associated bulk items using standard instrument assemblies and an estimated distance to new junction boxes.

A local junction box is assumed to be included as part of all skid packages. Signal cabling from the new junction boxes will run to a new remote instrument enclosure located in the new facility and included within the estimate.

4.2.10.2 Assumptions and Clarifications

- All cable will run aboveground except for the Transformer feeder line on the electrolysis process.
- No modifications are included to the existing site DCS/SIS system. It is assumed adequate capacity is available for the new plant requirements

4.2.11 Insulation and Paint

4.2.11.1 Quantity Basis

The insulation thickness and type are assumed based on similar recent projects and the process fluid temperature.

Touch-up painting has been estimated based on historical metrics of the following. The painting hours is based on 15 percent surface area of the above ground and underground piping and 15 percent of the equipment surface area.

4.2.11.2 Assumptions and Clarifications

- Engineered equipment will be furnished with insulation installed. Any insulation repair after transport has not been considered. Any pipe requiring insulation will be based on field installed insulation
- The estimate is based on shop-applied painting for equipment and piping, with field touch up as required
- Carbon steel pipe includes one coat of primer and one finish coat. Stainless steel and alloy pipe includes one finish coat
- Equipment and prefabricated pipe will be delivered to the site with their final coat shop applied. Field painting is touch-up only for these items

4.2.12 Material Pricing

Pricing for major mechanical, electrical and control system equipment was developed via in-house data from recent quotes for similar sized projects.

All bulk commodity pricing is based on in-house pricing using up to date unit rates which is sourced from Black & Veatch's library of past projects.

4.2.13 Heavy Haul/Heavy-Lift

There is no requirement for any heavy lift activity at site.

4.2.14 Scaffolding, Fire Watch and Hole Watch

Scaffolding and fire watch are included in the direct costs (man hours and labor) as a percentage of the direct field labor.

Scaffolding is calculated as a percent of the direct field manhours @ USD 65.00 per hour:

The following percentages were considered for scaffolding:

- Temporary Test Burn Hydrogen: 5 percent
- Blue Hydrogen SMR: 8 percent
- Green Hydrogen Electrolyzer: 15 percent

Firewatch/holewatch is calculated on 5 percent of the direct field manhours @ USD 32.46 per hour.

4.2.15 Material Allowances

No design or quantity allowance have been included for this level of estimate in the phase.

4.3 Home Office Costs

Home Office Engineering has been included based on the requirements for each option. This includes the following through detailed engineering:

- Process engineering
- Project controls and scheduling
- Execution planning
- Discipline design
- Project management and support
- Procurement
- Contracts
- Document control
- Travel and expenses

4.4 Other Costs

4.4.1 Freight

A cost has been included in this estimate as a percentage of the material cost for the temporary test burn, SMR and electrolysis. This assumes all freight will be inland. The following percentages were considered:

- Temporary Test Burn Hydrogen: 1.9 percent
- Blue Hydrogen SMR: 6 percent
- Green Hydrogen Electrolyzer: 6 percent

4.4.2 Tax

Sales taxes and duties are excluded.

4.4.3 Spare Parts

Spare parts were considered as a percentage of equipment material cost:

- Temporary Test Burn Hydrogen: 1 percent
- Blue Hydrogen SMR: 2 percent
- Green Hydrogen Electrolyzer: 2 percent

4.4.4 Vendor Representatives and Consultants

Vendor Representation was considered as a percentage of the equipment material cost:

- Temporary Test Burn Hydrogen: 1 percent
- Blue Hydrogen SMR: 1.5 percent
- Green Hydrogen Electrolyzer: 1.5 percent

4.4.5 Commissioning and Start-Up Support

Commissioning and Start-Up costs are included based on a percentage of the bare total installed cost (BTIC) for the temporary test burn, SMR and electrolysis.

- Temporary Test Burn Hydrogen: 1 percent
- Blue Hydrogen SMR: 2.7 percent
- Green Hydrogen Electrolyzer: 3 percent

4.5 Escalation

Escalation is currently excluded from the estimate as no schedule is currently available detailing the proposed project timeline.

4.6 Contingency

Contingency is defined as “a special monetary provision in the project budget to cover uncertainties or unforeseeable elements of time/cost within the scope of the project under Black & Veatch's control. Contingency typically covers risk of cost increases resulting from lack of scope definition, lack of particular experience, omissions, underestimation, technical problems, nonspecific schedule slippage, and like items. Scope changes are specifically excluded from contingency and considered an Owner cost."

Contingency for the project has been considered and is a percentage of BTIC for the temporary test burn, SMR and electrolysis.

- Temporary Test Burn Hydrogen: 20 percent
- Blue Hydrogen SMR: 20 percent
- Green Hydrogen Electrolyzer: 25 percent

4.7 EPC Contractor Overhead and Profit

Overhead and profit have been considered and are based on a percentage of 9.5 percent of the BTIC for the temporary test burn, SMR and electrolysis.

4.8 Exclusions and Owner's Costs

Owner's costs have been excluded from the estimate. Some of the items considered to be part of Owner's costs are as follows, but not limited to:

- Administrative authorizations, certificates, and operation permits
- All-Risk insurance
- Any site demolition
- Bank guarantees
- Business management systems
- Catalyst, chemicals, lubricants, and oil (first-fill)
- Construction utilities (Water and Electricity)
- Consultants
- Contaminated and hazardous material handling and/or disposal
- Exchange rate risk
- Financial costs (Bonds)
- First fill
- Geo-tech report
- Hydro-excavation
- Insurances (All Risk)
- Import customs and duties
- Infrastructure items
- Land cost
- Maintenance equipment and tools
- Owner's auditing/inspection/witness testing
- Owner's cost contingency
- Owner's cost escalation
- Owner staff and expenses
- Parent Company Guarantee
- Permits (building/environmental)
- Plant operations/maintenance vehicles (ambulances, fire, switch engine)
- Plant security
- Pre-investment or allowance for future capacity expansion
- Process simulator
- Project development costs

- Taxes and duties
- Topographical map
- Training for operations and maintenance

4.9 Estimate Summary

Table 4-1 Phase 1 Estimate Summary

Description	Test Burn (kUSD)	SMR (kUSD)	SMR CCS Pipeline (kUSD)	Electrolyzer (kUSD)
Direct Field Material (Includes Civil, Piling, Concrete, Structural Steel, Mechanical Equipment, Piping, Electrical, Control Systems, Insulation, Painting, and Fireproofing Material)	1,318	76,069	3,634	42,940
Direct Field Labor (Includes the direct labor costs associated with the material referenced above.)	227	5,724	5,722	3,528
Subcontracts	18	1,217		757
Subtotal Direct Field Cost (DFC)	**1,563**	**83,010**		**47,225**
Indirects	326	7,255		4,512
Construction Mgmt.	57	2,622		1,631
Total Field Costs (TFC)	**1,946**	**92,887**		**53,368**
Home Office	176	6,582		5,144
Subtotal Home Office (HOC)	**176**	**6,582**		**5,144**
Freight	25	4,540		2,557
Sales Tax	Excluded	Excluded		Excluded
Spare Parts	9	1,372		748
Vendor Reps	9	1,029		561
SU/Comm Support	22	3,291		1,929
Bare Total Installed Cost (BTIC)	**2,187**	**109,701**		**64,307**
Escalation	Excluded	Excluded		Excluded
Contingency/Risk	437	21,940		16,077
Overhead/G&A	77	3,840		2,251
Profit	131	6,582		3,858
Subtotal Other	**645**	**32,362**	**15,661**	**22,186**
Total Installed Cost (TIC)	**2,832**	**142,063**	**25,017**	**86,493**

5.0 Economic Impact Assessment

The Black & Veatch scope of work included an economic impact analysis of the construction expenditures associated with the CPGS hydrogen project. The analysis in this section estimates the economic impacts of the project on the state of Wyoming. Impacts are estimated in the areas of employment, income, value added, wages, federal taxes, and state and local taxes. The analysis is consistent with the Black & Veatch scope of work linked to the Black Hills Energy Hydrogen Pilot Project Funding Agreement (the WEA Funding Agreement) dated November 22, 2021 that states:

> **Economic impact assessment.** The expected economic impact assessment resulting from the construction of the test burn facility will be provided. The report will also provide stakeholders with a general understanding of how implementation of hydrogen infrastructure may impact the state. Direct impacts to be investigated include employment, income earned, and purchases of materials and equipment form within the state.

To derive these estimates, use has been made of data developed in previous study tasks and the IMPLAN impact analysis model, which is widely used in the energy industry. Section 5.1 provides some background on economic impact studies and the IMPLAN model used for this study. The remainder of this section provides details about the IMPLAN model and results for the CPGS hydrogen project.

5.1 Project Description

Previous sections of this report developed an estimated EPC cost for 1) the temporary test burn hydrogen (Phase 1), 2) the blue hydrogen SMR option (Phase 2), and 3) the green hydrogen electrolyzer option (Phase 3). Phase 2 and Phase 3 are mutually exclusive options that could follow Phase 1. In other words, if the project were carried out to completion, Phase 1 would be followed either by the Phase 2 or by Phase 3. The estimated EPC cost for Phase 1 is $2.83 million, the Phase 2 cost is estimated to be $167.08 million, and the Phase 3 estimated cost is $86.49 million. These are 2022-dollar estimates.

In addition to the EPC costs, there will be owner's costs that are not part of the EPC cost estimates. Table 5-1 lists various types of owner's costs that may arise from the hydrogen plant construction and that need to be accounted for outside of the EPC cost estimate. Previous Black & Veatch evaluations of actual power project construction has indicated that owner's costs may be in the range of 12 percent to 25 percent or more of the EPC cost. For this study, it is assumed that owner's costs will be 15 percent of the EPC cost. This assumption brings the total in-service cost to an estimated $3.26 million, $192.14 million, and $99.47 million for Phases 1, 2, and 3, respectfully, in 2022 dollars.

The investment in the CPGS hydrogen project will have a "direct" impact on the Wyoming economy arising from the expenditure of the CPGS hydrogen project total capital cost. To capture the total economic impact of each project investment, it would be necessary to follow the expenditure of the investment dollars as they worked their way through the economy over a period of a few years after the investment is complete. For example, purchases will be made from firms in Wyoming to provide concrete and lumber to the CPGS hydrogen project. As these supplier firms provide output to the CPGS hydrogen project, the suppliers will spend their revenue to pay employees and to purchase their own inputs that will be turned into products for sale. This process will continue through many rounds of spending in the economy and will create a total economic impact that is a multiple of the original, direct purchase of material and service inputs for the CPGS hydrogen project. This type of effect is called the "indirect effect."

Table 5-1 Sample of Possible Owner's Costs

Project Development • Site selection study • Interconnection study • Environmental permitting/offsets • Legal assistance • Public relations/community development • Provision of project management • Land purchase or lease • Land rezoning for greenfield sites • Road modifications/upgrades • Construction easements if not on site • Demolition/site remediation **Utility Interconnections** • Electric interconnect/upgrades/rights-of-way • Fuel supply and transport agreements • Gas interconnect/upgrades/rights-of-way • Water rights/pipeline/rights-of-way • Wastewater disposal/rights-of-way **Spare Parts and Plant Equipment** • Operational spare parts, supplies, materials • Maintenance and instrumentation tools • Lab tools and analytical equipment • Warehouse shelving and storage bins • Rolling stock (trucks, lifts, etc.) • Plant furnishings and supplies • Window treatments • Initial inventory of chemicals and reagents **Plant Startup/Construction Support** • Owner's site mobilization • O&M staff training • Initial fills of chemicals and reagents • Cost of fuel not recovered in power sales • Auxiliary power purchases • Witnesses to acceptance testing • Construction all-risk insurance	**Owner's Contingency** Owner's uncertainty and costs pending final negotiation: • Unidentified project scope increases • Unidentified project requirements • Costs pending final agreements (i.e., interconnection contract costs) **Owner's Project Management** • Preparation of bid documents and the selection of contractors and suppliers • Owner's engineering review • Provision of personnel for site construction monitoring **Taxes/Advisory Fees/Legal** • Income taxes • Property taxes • Sales and use taxes • Market consultants • Environmental consultants • Owner's legal expenses **Financing** • Financial advisor/financing fees • Lender's legal fees • Market analyst, independent engineer, insurance, rating agency • Interest during construction (a.k.a. allowance for funds used during construction) • Loan administration and commitment fees • Debt service reserve fund
Typical Owner's Cost Ranges (expressed as percentages of EPC contract value)	
Project Development: 0 – 2% Utility Interconnections: 2 – 15% Spare Parts and Plant Equipment: 0 – 3% Plant Startup/Construction Support: 0 – 2%	Owner's Contingency: 5 – 10% Owner's Project Management: 1 – 5% Taxes/Advisory Fees/Legal: 0 – 10% Financing: 6 – 15%

Similarly, a significant portion of the direct expenditure on the CPGS hydrogen project will be paid to workers who work on the CPGS hydrogen project. Through what is called the "induced effect," these

workers take their disposable earned income and spend it on goods and services such as clothing, rent, car payments, food, vacations, and savings. Establishments that receive the worker income in exchange for goods and services will, in turn, spend the revenue received to pay their own workers, to purchase supplies needed to provide additional goods and services, etc. This process will continue through multiple rounds of spending in the economy and will help create a total economic impact that is a multiple of the original wages received by the pipeline workers. Generally, through each round of spending, the impact will lessen because not all of the income is spent in the study area (Wyoming in this case) due to the purchase of imports, worker savings, etc. Thus, like waves made by a stone thrown into a pond, there will be an economic "ripple effect" that will lessen with time, as the successive rounds of spending work through the Wyoming economy. With each round of spending, the impact on the Wyoming economy will lessen due to leakages from the economy that arise when some expenditures are made outside the state economy (in the remainder of the US or on US imports).

While envisioning the successive rounds of spending in an economy is intuitive, in practice, it would be enormously difficult and expensive to trace the actual spending patterns of even a single construction project. Fortunately, there are mathematical methods for estimating the economic impact of an investment on the economy using complex economic models (commonly referred to as input-output models), first developed in the 1930s by Dr. Wassily Leontief. In recent decades, input-output models have been transformed into computerized commercial software that can generate impact estimates for employment, income, value added, output and taxes that arise due to a new investment or other change in economic activity. These models are built upon detailed databases, including survey data that tracks the historical economic interrelationship and expenditure patterns among industries and households. Two widely used input-output models are the RIMS II Input-Output model developed by the US Bureau of Economic Analysis, and the IMPLAN (Impact analysis for Planning) model, which is probably the most widely used model for large investment studies. IMPLAN was used in this analysis due to its widespread use and its reporting capabilities.

The IMPLAN model has its roots in the 1970s and was developed initially by the US Forest Service, which wanted to determine the impacts of certain forestry policy and management decisions. In the mid-1980s, the US Forest Service contracted with the University of Minnesota to support and further develop the model data sets. In 1993, Minnesota IMPLAN Group, Inc. (MIG) was founded as an independent organization through a technology transfer agreement with the University of Minnesota, and MIG was given rights to all future IMPLAN development. In 2013, IMPLAN was acquired by Boathouse Capital in a management buyout. For this project, Black & Veatch purchased the Wyoming data set and an IMPLAN license for the project.

5.2 Projected Project Expenditures by Major Component and Industry

Modeling the economic impacts of the CPGS hydrogen project requires multiple inputs and assumptions that flow into the impact analysis model. Foremost among these inputs are the expected costs and cost categories of the project during the construction phases.

The IMPLAN economic impact analysis estimates the impact of each of these three phases and the total impact, should the project be carried to completion, is derived from adding Phase 1 and Phase 2 impacts, or Phase 1 and Phase 3 impacts, since either Phase 2 or Phase 3 would follow Phase 1 (but not both). Table 5-2 indicates the resulting total cost of the project is estimated to be approximately $195.40 million for Phase 1 + Phase 2, or $102.73 for Phase 1 + Phase 3. These total costs are in 2022 dollars.

Table 5-2 Direct Construction Expenditures for the CPGS Hydrogen Project, by Phase

Direct Expenditures during Construction (2022 Dollars)

CPGS TOTAL COST BY PHASE	
Phase 1 Test Burn	$3.26 million
Phase 2 SMR and Pipe Line (Blue Hydrogen)	$192.14 million
Phase 3 Electrolysis (Green Hydrogen)	$99.47 million
Total, Phase 1 + Phase 2	**$195.40 million**
Total, Phase 1 + Phase 3	**$102.73 million**

An IMPLAN model was established for Phase 1, Phase 2, and Phase 3. An important assumption with the construction of the three models was to estimate the percent of construction expenditures that would occur in Wyoming versus outside of Wyoming. Expenditure patterns were developed by Black & Veatch consulting engineers familiar with the construction of power plant and pipeline projects. Table 5-3 shows the assumed sector expenditures for the three project phases and the amount of each expenditure category assumed to occur in Wyoming or in the remainder of the US.

In total, direct expenditures entered into the Wyoming model for the project are estimated to be $1.26 million for Phase 1, $70.45 million for Phase 2, and $33.10 million for Phase 3. The remainder of the total capital cost not spent in Wyoming for each phase ($1.93 million, $118.71 million, and $64.31 million, respectively) is assumed to be spent outside of Wyoming and is a leakage from the three Wyoming economic models.

Table 5-3 Development of Expenditure Profile for Construction of the Three Phases of the CPGS Hydrogen Project

Phase 1 - Test Burn							
	Cost Category	Spend	Wyoming	Rest of US (Leakage)	Percent of Spend Taxed	Tax	Total WY Spend
Direct Field Costs	Equipment	$ 934,376.40	$ -	$ 934,376.40	89%	$ -	$ -
	Piping	$ 76,613.96	$ 11,492.09	$ 65,121.87	89%	$ 409.12	$ 11,901.21
	Concrete	$ 72,717.82	$ 72,717.82	$ -	89%	$ 2,588.75	$ 75,306.57
	Sitework	$ 122,618.04	$ 98,094.43	$ 24,523.61	89%	$ 3,492.16	$ 101,586.60
	Structural Steel	$ 128,741.82	$ -	$ 128,741.82	89%	$ -	$ -
	Instrumentation	$ 53,113.11	$ 7,966.97	$ 45,146.14	89%	$ 283.62	$ 8,250.59
	Electrical	$ 90,239.64	$ 18,047.93	$ 72,191.71	89%	$ 642.51	$ 18,690.43
	Painting	$ 125.98	$ 125.98	$ -	89%	$ 4.48	$ 130.46
	Scaffolding	$ 17,553.25	$ 17,553.25	$ -	89%	$ 624.90	$ 18,178.15
	Fire/Hole Watch	$ 8,049.68	$ 6,439.74	$ 1,609.94	0%	$ -	$ 6,439.74
	Craft Incentive	$ 36,294.72	$ 36,294.72	$ -	0%	$ -	$ 36,294.72
	Craft Premium Time	$ 21,975.62	$ 21,975.62	$ -	0%	$ -	$ 21,975.62
Field Indirects	Small Tools & Consumables	$ 18,594.75	$ 18,594.75	$ -	100%	$ 743.79	$ 19,338.54
	Temporary Facilities	$ 16,904.32	$ 16,904.32	$ -	100%	$ 676.17	$ 17,580.49
	Construction Equipment	$ 39,697.35	$ 39,697.35	$ -	100%	$ 1,587.89	$ 41,285.24
	Field Staff & Supervision	$ 102,078.90	$ 102,078.90	$ -	0%	$ -	$ 102,078.90
	Construction Services	$ 20,866.15	$ 20,866.15	$ -	100%	$ 834.65	$ 21,700.80
	Craft Burdens & Benefits	$ 52,206.07	$ 52,206.07	$ -	0%	$ -	$ 52,206.07
	Craft Incentive & Subsistence	$ 36,294.72	$ 36,294.72	$ -	50%	$ 725.89	$ 37,020.61
	Staff Burdens & Benefits	$ 39,116.63	$ 39,116.63	$ -	0%	$ -	$ 39,116.63
	Construction Management (BV)	$ 56,710.50	$ 56,710.50	$ -	33%	$ 756.14	$ 57,466.64
Miscellaneous	Detail Engineering	$ 176,000.00	$ 17,600.00	$ 88,000.00	0%	$ -	$ 17,600.00
	Freight	$ 25,341.62	$ 25,341.62	$ -	100%	$ 1,013.66	$ 26,355.28
	Spare Parts	$ 9,303.18	$ 9,303.18	$ -	100%	$ 372.13	$ 9,675.31
	Vendor Reps	$ 9,303.18	$ 9,303.18	$ -	0%	$ -	$ 9,303.18
	Start-up & Commissioning	$ 22,000.00	$ 22,000.00	$ -	100%	$ 880.00	$ 22,880.00
	Contingency	$ 437,367.48	$ 218,683.74	$ 218,683.74	50%	$ 4,373.67	$ 223,057.42
	Overhead / G&A	$ 76,539.31	$ -	$ 76,539.31	0%	$ -	$ -
	Profit / EBIT	$ 131,210.24	$ -	$ 131,210.24	0%	$ -	$ -
	Owner's Costs	$ 424,793.17	$ 283,195.45	$ 141,597.72	0%	$ -	$ 283,195.45
	Total Installed Cost	**$ 3,256,747.62**	**$ 1,258,605.12**	**$ 1,927,742.50**		**$ 20,009.55**	**$ 1,278,614.66**

Phase 2 - SMR & Pipe Line (Blue Hydrogen)							
	Cost Category	Spend	Wyoming	Rest of US (Leakage)	Percent of Spend Taxed	Tax	Total WY Spend
Direct Field Costs	Equipment	$ 70,244,340.95	$ -	$ 70,244,340.95	89%	$ -	$ -
	Piping	$ 9,278,718.66	$ 1,391,807.80	$ 7,886,910.86	89%	$ 49,548.36	$ 1,441,356.16
	Concrete	$ 920,592.52	$ 920,592.52	$ -	89%	$ 32,773.09	$ 953,365.61
	Piling	$ 2,344,086.22	$ 2,344,086.22	$ -	89%	$ 83,449.47	$ 2,427,535.69
	Sitework	$ 1,162,001.97	$ 929,601.57	$ 232,400.39	89%	$ 33,093.82	$ 962,695.39
	Structural Steel	$ 546,393.47	$ -	$ 546,393.47	89%	$ -	$ -
	Instrumentation	$ 2,276,636.92	$ 341,495.54	$ 1,935,141.39	89%	$ 12,157.24	$ 353,652.78
	Electrical	$ 1,083,297.30	$ 216,659.46	$ 866,637.84	89%	$ 7,713.08	$ 224,372.54
	Insulation	$ 44,593.92	$ 44,593.92	$ -	89%	$ 1,587.54	$ 46,181.46
	Painting	$ 9,934.87	$ 9,934.87	$ -	89%	$ 353.68	$ 10,288.55
	Scaffolding	$ 1,217,249.08	$ 1,217,249.08	$ -	89%	$ 43,334.07	$ 1,260,583.15
	Fire/Hole Watch	$ 410,521.19	$ 328,416.95	$ 82,104.24	0%	$ -	$ 328,416.95
	Craft Incentive	$ 1,614,593.04	$ 1,614,593.04	$ -	0%	$ -	$ 1,614,593.04
	Craft Premium Time	$ 1,213,467.58	$ 1,213,467.58	$ -	0%	$ -	$ 1,213,467.58
Field Indirects	Small Tools & Consumables	$ 1,182,312.46	$ 1,182,312.46	$ -	100%	$ 47,292.50	$ 1,229,604.95
	Temporary Facilities	$ 1,074,829.51	$ 1,074,829.51	$ -	100%	$ 42,993.18	$ 1,117,822.69
	Construction Equipment	$ 2,033,461.23	$ 2,033,461.23	$ -	100%	$ 81,338.45	$ 2,114,799.68
	Field Staff & Supervision	$ 2,529,496.94	$ 2,529,496.94	$ -	0%	$ -	$ 2,529,496.94
	Construction Services	$ 1,227,629.59	$ 1,227,629.59	$ -	100%	$ 49,105.18	$ 1,276,734.78
	Craft Burdens & Benefits	$ 3,210,333.30	$ 3,210,333.30	$ -	0%	$ -	$ 3,210,333.30
	Craft Incentive & Subsistence	$ 1,859,164.55	$ 1,859,164.55	$ -	50%	$ 37,183.29	$ 1,896,347.84
	Staff Burdens & Benefits	$ 2,003,714.59	$ 2,003,714.59	$ -	0%	$ -	$ 2,003,714.59
	Construction Management (BV)	$ 3,817,312.99	$ 3,817,312.99	$ -	33%	$ 50,897.51	$ 3,868,210.50
Miscellaneous	Detail Engineering	$ 7,462,000.00	$ 746,200.00	$ 3,731,000.00	0%	$ -	$ 746,200.00
	Freight	$ 4,729,958.40	$ 4,729,958.40	$ -	100%	$ 189,198.34	$ 4,919,156.73
	Spare Parts	$ 1,522,376.08	$ 1,522,376.08	$ -	100%	$ 60,895.04	$ 1,583,271.12
	Vendor Reps	$ 1,029,282.06	$ 1,029,282.06	$ -	0%	$ -	$ 1,029,282.06
	Start-up & Commissioning	$ 3,467,000.00	$ 3,467,000.00	$ -	100%	$ 138,680.00	$ 3,605,680.00
	Contingency	$ 25,468,578.97	$ 12,734,289.49	$ 12,734,289.49	50%	$ 254,685.79	$ 12,988,975.28
	Overhead / G&A	$ 4,457,001.32	$ -	$ 4,457,001.32	0%	$ -	$ -
	Profit / EBIT	$ 7,640,573.69	$ -	$ 7,640,573.69	0%	$ -	$ -
	Owner's Costs	$ 25,062,218.01	$ 16,708,145.34	$ 8,354,072.67	0%	$ -	$ 16,708,145.34
	Total Installed Cost	**$ 192,143,671.39**	**$ 70,448,005.08**	**$ 118,710,866.31**		**$ 1,216,279.62**	**$ 71,664,284.70**

Phase 3 - Electrolysis (Green Hydrogen)							
	Cost Category	Spend	Wyoming	Rest of US (Leakage)	Percent of Spend Taxed	Tax	Total WY Spend
Direct Field Costs	Equipment	$ 37,886,127.91	$ -	$ 37,886,127.91	89%	$ -	$ -
	Piping	$ 2,325,997.19	$ 348,899.58	$ 1,977,097.61	89%	$ 12,420.82	$ 361,320.40
	Concrete	$ 1,108,308.95	$ 1,108,308.95	$ -	89%	$ 39,455.80	$ 1,147,764.75
	Sitework	$ 92,482.62	$ 73,986.10	$ 18,496.52	89%	$ 2,633.91	$ 76,620.00
	Structural Steel	$ 298,427.95	$ -	$ 298,427.95	89%	$ -	$ -
	Instrumentation	$ 1,708,861.03	$ 256,329.15	$ 1,452,531.87	89%	$ 9,125.32	$ 265,454.47
	Electrical	$ 2,008,163.66	$ 401,632.73	$ 1,606,530.93	89%	$ 14,298.13	$ 415,930.86
	Painting	$ 1,573.55	$ 1,573.55	$ -	89%	$ 56.02	$ 1,629.57
	Scaffolding	$ 757,086.62	$ 757,086.62	$ -	89%	$ 26,952.28	$ 784,038.91
	Fire/Hole Watch	$ 124,499.33	$ 99,599.46	$ 24,899.87	0%	$ -	$ 99,599.46
	Craft Incentive	$ 521,807.40	$ 521,807.40	$ -	0%	$ -	$ 521,807.40
	Craft Premium Time	$ 392,170.87	$ 392,170.87	$ -	0%	$ -	$ 392,170.87
Field Indirects	Small Tools & Consumables	$ 331,836.89	$ 331,836.89	$ -	100%	$ 13,273.48	$ 345,110.37
	Temporary Facilities	$ 301,669.90	$ 301,669.90	$ -	100%	$ 12,066.80	$ 313,736.70
	Construction Equipment	$ 570,726.84	$ 570,726.84	$ -	100%	$ 22,829.07	$ 593,555.91
	Field Staff & Supervision	$ 978,388.87	$ 978,388.87	$ -	0%	$ -	$ 978,388.87
	Construction Services	$ 344,555.95	$ 344,555.95	$ -	100%	$ 13,782.24	$ 358,338.18
	Craft Burdens & Benefits	$ 901,036.79	$ 901,036.79	$ -	0%	$ -	$ 901,036.79
	Craft Incentive & Subsistence	$ 521,807.40	$ 521,807.40	$ -	50%	$ 10,436.15	$ 532,243.54
	Staff Burdens & Benefits	$ 562,377.92	$ 562,377.92	$ -	0%	$ -	$ 562,377.92
	Construction Management (BV)	$ 1,630,648.11	$ 1,630,648.11	$ -	33%	$ 21,741.97	$ 1,652,390.09
Miscellaneous	Detail Engineering	$ 5,144,000.00	$ 514,400.00	$ 2,572,000.00	0%	$ -	$ 514,400.00
	Freight	$ 2,557,195.96	$ 2,557,195.96	$ -	100%	$ 102,287.84	$ 2,659,483.80
	Spare Parts	$ 747,738.00	$ 747,738.00	$ -	100%	$ 29,909.52	$ 777,647.52
	Vendor Reps	$ 560,803.50	$ 560,803.50	$ -	0%	$ -	$ 560,803.50
	Start-up & Commissioning	$ 1,929,000.00	$ 1,929,000.00	$ -	100%	$ 77,160.00	$ 2,006,160.00
	Contingency	$ 16,076,823.30	$ 8,038,411.65	$ 8,038,411.65	50%	$ 160,768.23	$ 8,199,179.88
	Overhead / G&A	$ 2,250,755.26	$ -	$ 2,250,755.26	0%	$ -	$ -
	Profit / EBIT	$ 3,858,437.59	$ -	$ 3,858,437.59	0%	$ -	$ -
	Owner's Costs	$ 12,973,996.40	$ 8,649,330.93	$ 4,324,665.47	0%	$ -	$ 8,649,330.93
	Total Installed Cost	**$ 99,467,305.74**	**$ 33,101,323.11**	**$ 64,308,382.63**		**$ 569,197.57**	**$ 33,670,520.68**

Following the allocation of expenditures by sector, the expenditure profile was entered into each of the three IMPLAN models. The costs shown in Table 5-3 for Wyoming expenditures were placed into the construction of new power and communication structures industry classification (industry 52) in IMPLAN. IMPLAN was then run and produced the direct, indirect and induced impacts in the categories of employment, income, value added and output. In addition, IMPLAN tracked federal plus state and local taxes in the economy. The results of these simulations have been condensed and are presented below.

5.3 Impact Results

Table 5-4 presents a summarized version of the individual IMPLAN modeling results for the three (Phase 1, Phase 2, and Phase 3) Wyoming models constructed. The combined impact of the Phase 1 + Phase 2 models and the Phase 1 + Phase 3 of the models are also shown. Results are arranged by impact category and type of effect.

Table 5-4 indicates that for the Temporary Test Burn Hydrogen Phase (Phase 1 of the overall project), the state of Wyoming will experience an estimated $1.28 million in direct construction expenditures. These expenditures are projected to have the following impacts:

- The Phase 1 Wyoming construction expenditures are estimated to support or create a total of approximately 11 jobs including those arising from direct, indirect, and induced effects. These employment numbers should be viewed as total job-years supported or created by expenditures

during the study period.1 As Phase 1 only has a 4-month construction period this will equate to 32 jobs during the construction period.

- The Phase 1 Wyoming construction expenditures are estimated to create $669,496 in labor income (which includes wages and benefits) at an average of $63,177 per job across all impacted industries. Labor income includes all forms of employment income, including employee compensation (wages and benefits) and proprietor income.
- The Phase 1 Wyoming construction expenditures are estimated to contribute more than $978,418 in value added. Value added for a firm is their sales revenue less the costs of goods and services purchased. The sum of value added in all industries is the gross domestic product (GDP), or the total value of all final goods and services produced in the nation.2
- The Phase 1 Wyoming construction expenditures are estimated to account for more than $2.81 million in total economic output, which is the total value of production from all industries impacted by the investment expenditures. Virtually all industries will be impacted by direct expenditures; some will directly supply equipment and materials while other industries such as workers spend their income on goods and services. 3
- The Phase 1 Wyoming construction expenditures are projected to generate $98,650 in state and local taxes and $143,257 in total federal tax revenues.

Table 5-4 indicates that for the Blue Hydrogen SMR (Phase 2 of the overall project), the state of Wyoming will experience an estimated $71.66 million in direct construction expenditures. These expenditures are projected to have the following impacts:

- The Phase 2 Wyoming construction expenditures are estimated to support or create a total of approximately 605 jobs including those arising from direct, indirect, and induced effects. These employment numbers should be viewed as total job-years supported or created by expenditures during the study period.4 As the Phase 2 construction period is 14 months, this will equate to 519 jobs.
- The Phase 2 Wyoming construction expenditures are estimated to create $38.58 million in labor income (which includes wages and benefits) at an average of $63,742 per job across all impacted industries. Labor income includes all forms of employment income, including employee compensation (wages and benefits) and proprietor income.

---

[1] IMPLAN's glossary of terms defines a "job" as "the annual average of monthly jobs in that industry" but also points out that this can be "1 job lasting 12 months" or"2 jobs lasting 6 months each" or "3 jobs lasting 4 months each" and also explains that "a job can be either full-time or part-time."

[2] The IMPLAN glossary defines "value added" as "The difference between an industry's or an establishments total output and the cost of its intermediate inputs. It equals gross output (sales or receipts and other operating income, plus inventory change) minus intermediate inputs (consumption of goods and services purchased from other industries or imported)." As a simplified example, if a pipeline manufacturer purchased a steel plate for $10,000 then transformed this into a pipeline segment that was then sold for $50,000 then the value added would be $40,000 (ignoring other intermediate inputs and their costs).

[3] The IMPLAN glossary defines "output" as "the value of industry production…in producer prices. For manufacturers this would be sales plus/minus change in inventory. For service sectors production = sales…."

[4] IMPLAN's glossary of terms defines a "job" as "the annual average of monthly jobs in that industry" but also points out that this can be "1 job lasting 12 months" or"2 jobs lasting 6 months each" or "3 jobs lasting 4 months each" and also explains that "a job can be either full-time or part-time."

- The Phase 2 Wyoming construction expenditures are estimated to contribute more than $55.79 million in value added. Value added for a firm is their sales revenue less the costs of goods and services purchased. The sum of value added in all industries is the GDP, or the total value of all final goods and services produced in the nation.5
- The Phase 2 Wyoming construction expenditures are estimated to account for more than $156.06 million in total economic output, which is the total value of production from all industries impacted by the investment expenditures. Virtually all industries will be impacted by direct expenditures; some will directly supply equipment and materials while other industries such as workers spend their income on goods and services. 6
- The Phase 2 Wyoming construction expenditures are projected to generate $5.60 million in state and local taxes and $8.17 million in total federal tax revenues.

Table 5-4 indicates that for the Green Hydrogen Electrolyzer (Phase 3 of the overall project), the state of Wyoming will experience an estimated $33.67 million in direct construction expenditures. These expenditures are projected to have the following impacts:

- The Phase 3 Wyoming construction expenditures are estimated to support or create a total of approximately 282 jobs including those arising from direct, indirect, and induced effects. These employment numbers should be viewed as total job-years supported or created by expenditures during the study period.7 As Phase 3 only has a 5-month construction period this will equate to 678 jobs during the construction period.
- The Phase 3 Wyoming construction expenditures are estimated to create $17.90 million in labor income (which includes wages and benefits) at an average of $63,391 per job across all impacted industries. Labor income includes all forms of employment income, including employee compensation (wages and benefits) and proprietor income.
- The Phase 3 Wyoming construction expenditures are estimated to contribute more than $26.02 million in value added. Value added for a firm is their sales revenue less the costs of goods and services purchased. The sum of value added in all industries is the GDP, or the total value of all final goods and services produced in the nation.8
- The Phase 3 Wyoming construction expenditures are estimated to account for more than $73.58 million in total economic output, which is the total value of production from all industries

[5] The IMPLAN glossary defines "value added" as "The difference between an industry's or an establishments total output and the cost of its intermediate inputs. It equals gross output (sales or receipts and other operating income, plus inventory change) minus intermediate inputs (consumption of goods and services purchased from other industries or imported)." As a simplified example, if a pipeline manufacturer purchased a steel plate for $10,000 then transformed this into a pipeline segment that was then sold for $50,000 then the value added would be $40,000 (ignoring other intermediate inputs and their costs).
[6] The IMPLAN glossary defines "output" as "the value of industry production…in producer prices. For manufacturers this would be sales plus/minus change in inventory. For service sectors production = sales…."
[7] IMPLAN's glossary of terms defines a "job" as "the annual average of monthly jobs in that industry" but also points out that this can be "1 job lasting 12 months" or"2 jobs lasting 6 months each" or "3 jobs lasting 4 months each" and also explains that "a job can be either full-time or part-time."
[8] The IMPLAN glossary defines "value added" as "The difference between an industry's or an establishments total output and the cost of its intermediate inputs. It equals gross output (sales or receipts and other operating income, plus inventory change) minus intermediate inputs (consumption of goods and services purchased from other industries or imported)." As a simplified example, if a pipeline manufacturer purchased a steel plate for $10,000 then transformed this into a pipeline segment that was then sold for $50,000 then the value added would be $40,000 (ignoring other intermediate inputs and their costs).

impacted by the investment expenditures. Virtually all industries will be impacted by direct expenditures; some will directly supply equipment and materials while other industries such as workers spend their income on goods and services. 9

- The Phase 3 Wyoming construction expenditures are projected to generate $2.64 million in state and local taxes and $3.83 million in total federal tax revenues.

Combining the impacts of the relevant models (Phase 1 + Phase 2, or Phase 1 + Phase 3), the $72.94 million (Phase 1 + Phase 2) or $34.95 million (Phase 1 + Phase 3) in direct Wyoming construction expenditures are projected to generate the following:

- The combined expenditures are projected to support or create 616 annual jobs for Phase 1 + Phase 2 or 293 annual jobs for Phase 1 + Phase 3.
- The combined expenditures are estimated to create more than $39.25 million in labor income at an average of $63,732 per job across all impacted industries for Phase 1 + Phase 2, or $18.57 million in labor income at an average of $63,384 per job across all impacted industries for Phase 1 + Phase 3.
- The combined expenditures are estimated to contribute more than $56.76 million in value added for Phase 1 + Phase 2, or $26.99 million in value added for Phase 1 + Phase 3.
- The combined expenditures are estimated to account for nearly $158.87 million in total economic output for Phase 1 + Phase 2 (total economic output is the total value of production from all industries impacted by the investment expenditures), or $76.39 million in total economic output for Phase 1 + Phase 3.
- The combined construction expenditures are projected to generate more than $5.70 million in state and local taxes and nearly $8.31 million in total federal tax revenues for Phase 1 + Phase 2, or $2.74 million in state and local taxes and nearly $3.98 million in total federal tax revenues for Phase 1 + Phase 3.

[9] The IMPLAN glossary defines “output” as “the value of industry production…in producer prices. For manufacturers this would be sales plus/minus change in inventory. For service sectors production = sales….”

Table 5-4 Impact Results of the IMPLAN Models (Phase 1, Phase 2, Phase 3, Phase 1 + Phase 2, Phase 1 + Phase 3)

Total Impacts from Construction Expendutures in Wyoming						
Phase 1 - Test Burn						
Impact	Employment	Labor Income	Value Added	Output	State & Local Taxes	Federal Taxes
1 - Direct	3.44	$265,923.95	$285,933.50	$1,278,614.66	$30,109.37	$60,364.92
2 - Indirect	5.42	$329,115.72	$542,579.39	$1,254,299.55	$52,044.11	$67,556.77
3 - Induced	1.74	$74,456.38	$149,904.90	$277,544.89	$16,496.98	$15,335.73
Total	10.60	$669,496.05	$978,417.78	$2,810,459.11	$98,650.46	$143,257.43
Phase 2 - SMR and Pipe Line (Blue Hydrogen)						
Impact	Employment	Labor Income	Value Added	Output	State & Local Taxes	Federal Taxes
1 - Direct	209.43	$16,338,792.77	$17,555,072.39	$71,664,284.70	$1,815,320.45	$3,598,595.97
2 - Indirect	295.32	$17,939,488.41	$29,574,997.90	$68,369,546.60	$2,836,827.92	$3,682,394.73
3 - Induced	100.45	$4,298,418.48	$8,655,021.74	$16,025,952.58	$952,510.37	$885,366.30
Total	605.20	$38,576,699.66	$55,785,092.03	$156,059,783.89	$5,604,658.74	$8,166,356.99
Phase 3 - Electrolysis (Green Hydrogen)						
Impact	Employment	Labor Income	Value Added	Output	State & Local Taxes	Federal Taxes
1 - Direct	95.53	$7,383,540.41	$7,952,737.98	$33,670,520.68	$852,947.46	$1,674,180.52
2 - Indirect	140.36	$8,526,530.79	$14,056,818.37	$32,495,633.70	$1,348,327.22	$1,750,220.03
3 - Induced	46.48	$1,989,560.40	$4,005,521.02	$7,415,942.38	$440,802.86	$409,785.61
Total	282.37	$17,899,631.60	$26,015,077.36	$73,582,096.76	$2,642,077.54	$3,834,186.16
Phase 1 and Phase 2						
Impact	Employment	Labor Income	Value Added	Output	State & Local Taxes	Federal Taxes
1 - Direct	212.87	$16,604,716.72	$17,841,005.89	$72,942,899.36	$1,845,429.82	$3,658,960.89
2 - Indirect	300.74	$18,268,604.13	$30,117,577.29	$69,623,846.15	$2,888,872.03	$3,749,951.50
3 - Induced	102.19	$4,372,874.86	$8,804,926.64	$16,303,497.47	$969,007.35	$900,702.03
Total	615.80	$39,246,195.71	$56,763,509.81	$158,870,243.00	$5,703,309.20	$8,309,614.42
Phase 1 and Phase 3						
Impact	Employment	Labor Income	Value Added	Output	State & Local Taxes	Federal Taxes
1 - Direct	98.97	$7,649,464.36	$8,238,671.48	$34,949,135.34	$883,056.83	$1,734,545.44
2 - Indirect	145.78	$8,855,646.50	$14,599,397.75	$33,749,933.25	$1,400,371.33	$1,817,776.81
3 - Induced	48.22	$2,064,016.78	$4,155,425.92	$7,693,487.28	$457,299.84	$425,121.34
Total	292.96	$18,569,127.64	$26,993,495.15	$76,392,555.87	$2,740,728.00	$3,977,443.59

5.3.1 Effective Multipliers

Based on a comparison of the total projected impact with the direct impact of the investment, an effective multiplier can be generated for the IMPLAN categories in Table 5-4. For Phase 1 + Phase 2 and for Phase 1 + Phase 3, the multipliers for the project are shown in Table 5-5.

Table 5-5 Economic Impact Multiplier by Category (Phase 1 + Phase 2, and Phase 1 + Phase 3)

Economic Impact Multiplier		
Phase 1 + Phase 2	Employment	2.89
	Labor Income	2.36
	Value Added	3.18
	Output	2.18
	State and Local Taxes	3.09
	Federal Taxes	2.27
Phase 1 + Phase 3	Employment	2.96
	Labor Income	2.43
	Value Added	3.28
	Output	2.19
	State and Local Taxes	3.10
	Federal Taxes	2.29

6.0 Permitting Matrix

Preliminary permitting requirements are shown in the permitting matrix, Appendix E. Specifically, general environmental permitting requirements are assessed for each technology.

- Temporary Test Burn Hydrogen
- Blue Hydrogen SMR
- Green Hydrogen Electrolyzer

Requirements are listed following the top-down logic from federal, state, to local government (Laramie County) whichever has jurisdiction over developmental projects.

Permit fees and consulting fees are also provided in the matrix. Note that detailed equipment lists, engineering/construction planning, operation, etc. are still needed to estimate more accurate fees. Therefore, fees provided here are only estimates and subject to change once project components are determined.

7.0 Schedule

Level 1 EPC project schedules are shown in Appendix F and includes detailed design, procurement, and construction phases of the project for each technology.

- Temporary Test Burn Hydrogen
- Blue Hydrogen SMR
- Green Hydrogen Electrolyzer

8.0 Alignment with WEA Request for Proposal

Exhibit A of the WEA Funding Agreement provides for phase 1 of a two phase project. In the first phase, BHC is leading a team in the development of a combustion turbine hydrogen utilization project intended to improve sustainability of current natural gas-fired electricity generation in Wyoming and advance the understanding of how to combust Wyoming hydrogen in turbines.

Specifically, this first phase covers the following:

- Feasibility study for a natural gas-fed blue hydrogen gas generator with carbon capture
- Feasibility study for a green hydrogen gas generator fed with renewable energy and water
- Conceptual engineering assessment of equipment modifications of GE LM6000 combustion turbines to accommodate blended fuel mix of hydrogen and methane

If determined to be feasible, the second phase will include a hydrogen cofiring demonstration using the CPGS Unit 2 GE LM6000 PF.

8.1 Relevance to WEA Goals

CLFP engaged with GE, Black & Veatch, and Tallgrass for the conceptual engineering and feasibility study in support of the WEA Funding Agreement.

In recent bench rig testing, GE assessed a maximum current blend ratio, by volume, of 35 percent hydrogen with 65 percent natural gas for use in the CPGS LM6000 PF with the DLE1.5. GE has indicated a hydrogen demonstration project using the 35 percent hydrogen blend is necessary to properly map the engine for proper operation and to determine final equipment modifications.

Once the CPGS LM6000 PF has been properly mapped for reliable, consistent operation, the turbine is expected to be ready, once final equipment modifications have been determined and installed, for dispatch with a blend of hydrogen and natural gas fuel.

While both the blue hydrogen and green hydrogen scenarios are feasible for the CPGS site, final determination of feasibility is tied to the ability of GE to demonstrate hydrogen cofiring and to properly define the necessary equipment modifications, including modifications to the post-combustion emissions control equipment. As Unit 2 is currently the only host for hydrogen use at the site, it is imperative that GE demonstrate success in blending hydrogen into the unit.

Beyond the demonstration of hydrogen cofiring in Unit 2 at CPGS, the site is located near the intersection of Interstate-80 and Interstate-25 in southeast Wyoming, near the highest population County of Laramie, home of the highest population city of Cheyenne. The fourth highest population city of Laramie is approximately 1-hour drive to the west. Movement into the transportation sector through expansion of the hydrogen generation and storage, through either blue hydrogen or green hydrogen, would increase the appeal of building or expanding the hydrogen generation plant.

With the site approximately 10 miles from the Colorado state line, and approximately 40 miles from the outskirts of the metropolitan area of Fort Collins, Colorado, WEA may receive benefit through the initiation of a transportation study to further establish sizing criteria of the hydrogen generation plant in addition to usage within the CPGS Unit 2 LM6000 PF.

Success of the blue hydrogen scenario is bound to the sequestration of CO_2.Tallgrass has provided a viable path for sequestration. Further investigation of geologic formations may yield injection wells closer to the site, providing additional benefit to the project through potentially lower capital costs.

9.0 Conclusions and Recommendations

Initial investigation into the use of blended hydrogen within the CPGS Unit 2 LM6000 PF to a level of 35 percent hydrogen by volume feasible, although further investigation is necessary to determine all necessary equipment modification to ensure reliability and compliance with emissions standards.

When using the CPGS Unit 2 LM6000 PF as the hydrogen host for either blue hydrogen with carbon capture and sequestration or green hydrogen, both hydrogen solutions are technically feasible. Given the intermittent dispatch nature of Unit 2, further expansion into the additional LM6000 units at the CPGS site and/or expansion into the transportation sector has potential to stabilize operations for the hydrogen generation facilities. In addition, expansion into the transportation sector has potential to diversify revenue streams for the Wyoming energy strategy through an export hub.

10.0 Development Plan/Future Considerations

Due to the early design stages of a project, there are many items that were not considered at this stage. Throughout the study, Black & Veatch documented various items to further optimize the site or to consider when detailing a final design or solution.

- Initiate a temporary hydrogen test burn and complete the final, site-specific design study on the GE LM6000 PF to define all necessary modifications to reconfigure the CT for operation on a 35 percent by volume blend of hydrogen.
- Once establishing the parameters for a 35 percent by volume blend of hydrogen, working further with GE to understand operation at 100 percent hydrogen will necessitate expansion of the hydrogen generation system, whether blue or green, and minimize cycling.
- Current engine mapping in the ABC mode and AB mode considers only base-load operation with a variability on the blend ratio. Future consideration for reduced loads and minimum load should be considered for a complete understanding of engine performance.
- Expansion of hydrogen use to the other LM6000 PF turbines on site will increase storage demand for hydrogen and provide further opportunities to minimize cycling of the hydrogen generation system.
- For permitting, a series of planned add-ons versus one large initial build is less favorable due to increased cost and potential scrutiny (air permit).
- Electrolysis (green hydrogen) could be optimized by looking at electric rate schedules to operate at lower rates during non-peak times.
- A detailed analysis of NFPA 2 would need to be completed. A preliminary analysis of NFPA 2 safety distances was used based on the surrounding site and preliminary equipment sizes and pressures. Final safety distances would need to be confirmed once equipment sizing is finalized.
- Expansion of the blue hydrogen or green hydrogen generation plant to accommodate the transportation sector may assist in managing supply/demand disconnects.
    - CPGS would need to provide a separate entrance from the secured power facility to accommodate truck traffic for bulk hydrogen fills or dispensing stations for automobiles powered by hydrogen.
    - To verify road layouts, an Autoturn study would need to be completed for the largest trucks/vehicles that CPGS expects to accommodate.
- The general arrangements use storage cylinder bundles stacked two high, providing a conservative estimate for footprint allocation. Further investigation to stacking these bundles higher or using a larger number of smaller cylinders may reduce footprint but could come with a cost adjustment due to increased structural needs.
- The current design basis uses 24 hours of hydrogen storage based on current operation of the Unit 2 LM6000 PF. Understanding future dispatch needs of the unit provides an opportunity to optimize the total storage volume.
- Hydrogen storage is currently based on a single initial compression to 4,000 psig. Once storage pressure equals the necessary CT required pressure of 650 psig, the remaining hydrogen is unusable. To use hydrogen from a storage vessel below 650 psig, recompression is necessary. Depending on CT operations, recompression may provide for more efficient storage.

- Assumptions were made for access/maintenance requirements based on Black & Veatch's experience. However, there should be a complete evaluation of any access/maintenance needs required for each piece of equipment to ensure adequate space is reserved on the layouts and/or see if the spacing can be optimized following input from vendors.
- Understanding operation demands could lend itself to a technology selection, start/stop, constant demand, turndown, etc.
- Means and methods of construction should be explored to lower CAPEX costs. Items to consider are modularization, shop fabrication of bulks to the extent possible, lean and prefab construction techniques.

Appendix A. Block Flow Diagram

REV C

Temporary Test Burn Hydrogen
Block Flow Diagram
Capacity: 10.3 X 1.1 tonne/day

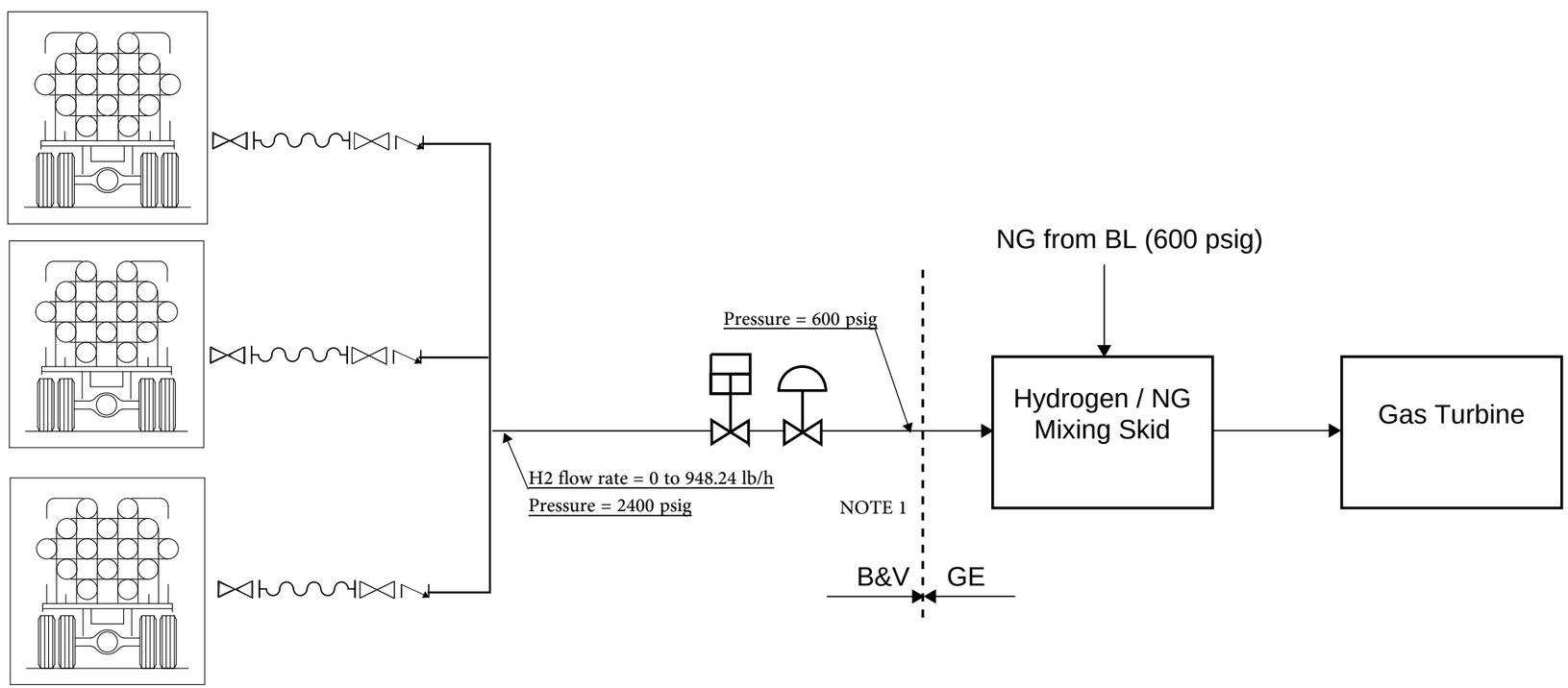

NOTES
1. GE TO CONFIRM PRESSURE OF HYDROGEN REQUIRED AT BATTERY LIMIT.
2. TANKER TRUCK CAPACITY WILL BE CONFIRMED BASED ON PRESSURE REQUIRED AT BATTERY LIMIT.
3. 25 TRAILERS REQUIRED FOR ABC MAPPING AND AN ADDITIONAL 17 TRAILERS REQUIRED FOR AB MAPPING. EXPECT 3 TRAILERS TO BE MANIFOLDED AT ONE TIME.

REV C

Blue Hydrogen SMR Block Flow Diagram

Capacity: 10.3 x 1.1 Tonne/day

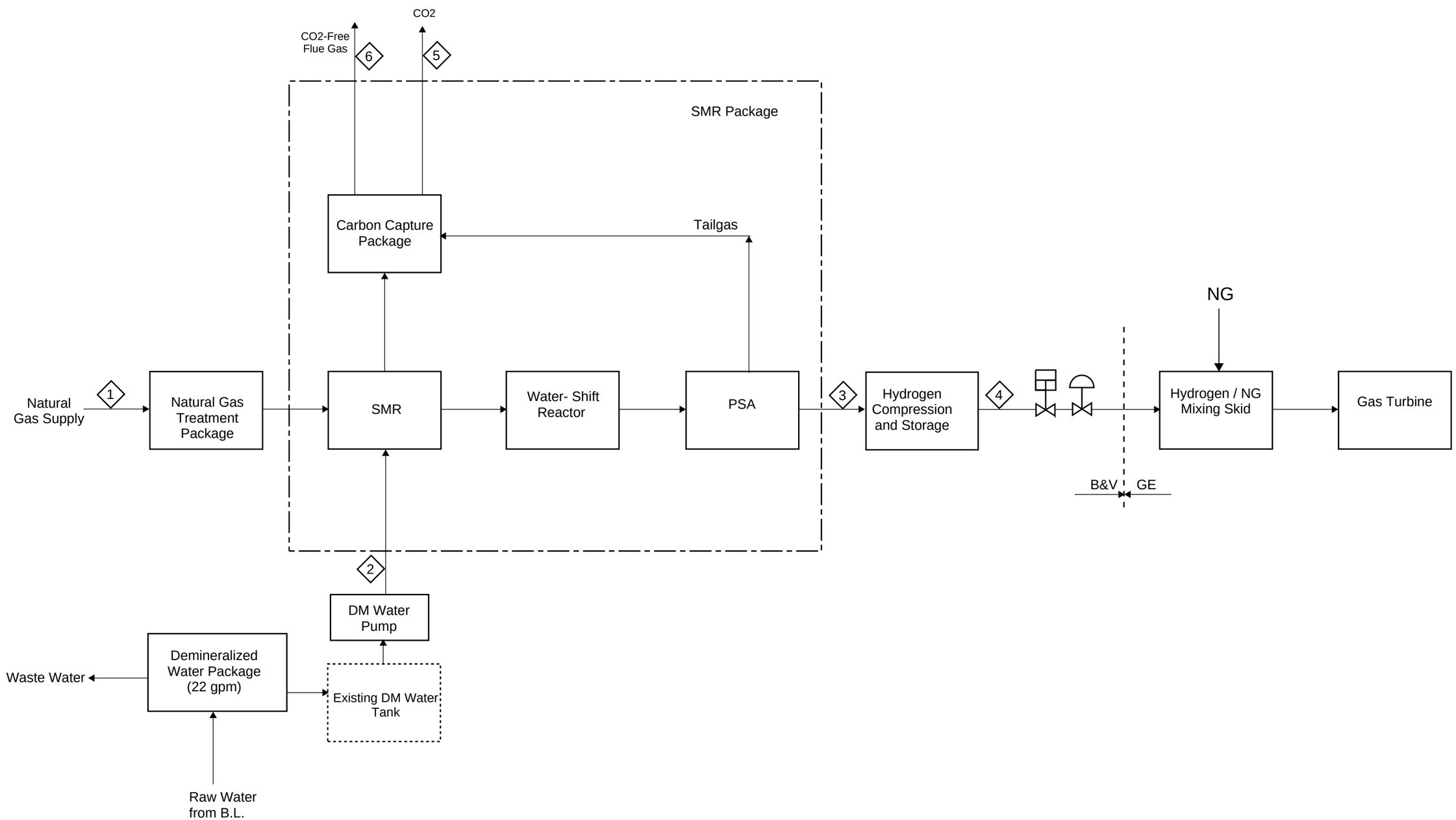

REV C

Green Hydrogen Electrolyzer
Block Flow Diagram
Capacity: 10.3 X 1.1 tonne/day

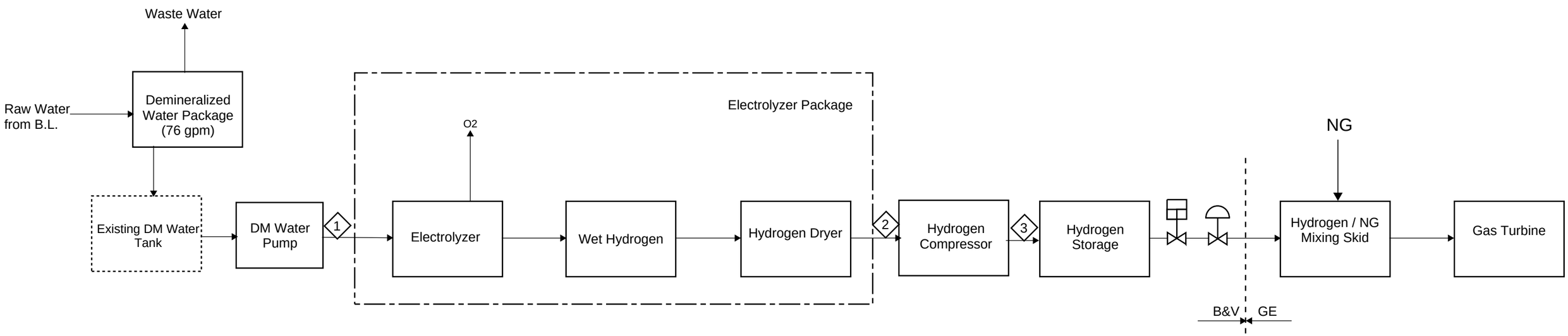

REV B

Appendix B. Equipment List and Material Balance

EQUIPMENT LIST

B&V PROJECT NO. 412239

NO	DATE	REVISIONS AND RECORDS OF ISSUE	DRN	DES	CHK	PDE	APP
B	26/Sep/2022	Revised for Estimation					
A	4/Sep/2022	Issued for Reliminary Estimation		ND			

BLACK & VEATCH

ENGINEER | DRAWN
CHECKED | DATE

CPGS H2 Cofire Feasibility Study

EQUIPMENT LIST

PROJECT DRAWING NUMBER: 412239 -0000-P0101

REV: B

CLIENT REV

BLACK & VEATCH
Temporary Test Burn Hydrogen Equipment List

Tag	Equipment Name	Quantity	Type	Capacity/Duty	Size	Design		Materials of Construction	Notes
						Pressure (psig)	Temperature (°F)		
Packaged Equipment & Skid									
	Gaseous Hydrogen Trailer & Hookup	42		One trailer 120,000 cf @2,400 psig					50% of useable volume; 25 trailers for ABC mapping and 17 trailers for AB mapping
	Nitrogen Package	1		50 scfm					Temporary portable package
	Hydrogen/Natural Gas Mixing Skid	1							Temporary portable package
	Gas Analyzer	1							Temporary portable package
Miscellaneous systems									
	Remote Control Cabinet	1							
	Transformer	1		TBD					

BLACK & VEATCH
Blue Hydrogen SMR Equipment List

Tag	Equipment Name	Quantity	Type	Capacity/Duty	Size	Design		Materials of Construction	Notes
						Pressure (psig)	Temperature (°F)		
Packaged Equipment & Skids									
	SMR Package (Hydrogen Generation System)	1		10.3 X 1.1 tonnes/d H2, 681 KW					
	Steam Methane Reformer (SMR)								Included in SMR Package
	Water Shift Reactor								Included in SMR Package
	Pressure Swing Adsorption (PSA) Package								Included in SMR Package
	Carbon Capture Package	1		9830 lb/h CO2, 513 kW					Stream 28 from 10 tpd simulation
	Amine Regenerator								
	Amine Cooler								
	Amine Regenerator Reflux Condenser								
	Flue Gas Train Treatment Skid								
	Flue Gas Cooler								
	Flue Gas CO2 Absorber								
	Carbon Sequestration System	1		9830 lb/h CO2					
	Flue Gas Compressor	1W+1S		1000 psid, 20 hp					To Tallgrass Trailblazer via 4"15 mile 316 SS line
	Hydrogen Storage Compression Unit	1		2970 scfm (10.3 tonnes/d) @ 3535 psid, 623 kW ea.					Includes auxiliaries, 2x100%
	Hydrogen Storage Tanks	240	Horizontal	10300 kg (total) or 22708 lb (Total)	**each tube is 1.5'D x 50'L, 90.8ft^3**				4000 psig storage pressure, 10 banks of 24 tubes each (8x3)
	Natural Gas Treatment Package	1		3541 lb/h X 1.1 capacity					
	Water Treatment Package (Demineralizer)	1		22 gpm (10954 lb/h) DM water generation					Located in Existing Administration Bldg
	Demineralized Water Pump	1W+1S		22 gpm @ 600 psid					Located next to Demin Water Tank
	Air Compressor Package	1		3000 scfm					
	Nitrogen Package	1		105 scfm					
	Hydrogen/Natural Gas Mixing Skid	1							
	Gas Analyzer	1							
Miscellaneous Items									
	Remote Control Cabinet	1							
	Transformer	1							

BLACK & VEATCH
Green Hydrogen Electrolyzer Equipment List

Tag	Equipment Name	Quantity	Type	Capacity/Duty	Size	Design		Materials of Construction	Notes
						Pressure (psig)	Temperature (°F)		
Packaged Equipment & Skids									
	Electrolyzer Package (Hydrogen Generation System)	1		10.3 X 1.1 tonnes/d H2, 22,600 kW					
	Electrolyzer								Included in Electrolyzer package
	Fin Fan Cooler	1							Included in Electrolyzer package
	Chiller	1							Included in Electrolyzer package
	Filter and Dryer	1							Included in Electrolyzer package
	Hydrogen Storage Compression Unit	1		2970 scfm (10.3 tonnes/d) @ 3,783 psid, 984 kW ea.					Includes auxiliaries, 2x100%
	Hydrogen Storage Tanks	240	Horizontal	10300 kg (total) or 22708 lb (Total)	**each tube is 1.5'D x 50'L, 90.8ft^3**				4000 psig storage pressure, 10 banks of 24 tubes each (8x3)
	Water Treatment Package (Demineralizer)	1		76 gpm (37920 lb/h) DM water generation					
	Demineralized Water Pump	1W+1S		76 gpm @ 218 psid					
	Air Compressor Package	1		3000 scfm					
	Nitrogen Package	1		105 scfm					
	Hydrogen/Natural Gas Mixing Skid	1							
	Gas Analyzer	1							
	Transformer	1		30MVA					West of Electrolyzer
	Power Distribution Center (PDC)	1							
Miscellaneous Items									
	Remote Control Cabinet	1							
	Transformer	1							

BLACK & VEATCH

CONFIDENTIAL

Rev.	Date	Revisions and Record of Issue	By	Checked	Approved
A	05-SEP-22	ISSUED FOR REVIEW	TBS	ND	MF
B	04-OCT-22	ISSUED FOR REVIEW	TBS	ND	MF

Feasibility Study for Cheyenne Prairie Generating

MATERIAL BALANCE - DESIGN CASE

B&V Doc. No.: 412239-0000-P2001 Rev. B

Client Doc. No.: Rev.

Sheet 1 Page 1 of 3

MATERIAL BALANCE - DESIGN CASE (Blue & Green Hydrogen)

Rev.	Date	Revisions and Record of Issue	By	Checked	Approved
A	05-SEP-22	ISSUED FOR REVIEW	TBS	ND	MF
B	04-OCT-22	ISSUED FOR REVIEW	TBS	ND	MF

BLACK & VEATCH

CONFIDENTIAL

Feasibility Study for Cheyenne Prairie Generating Station (CPGS)

MATERIAL BALANCE - DESIGN CASE (Blue Hydrogen)

B&V Doc. No.: 412239-0000-P2001 | Rev. B

Client Doc. No.: | Rev.

Stream:			1	2	3	4	5	6
Desc.:			NG from Battery limit	DM water to SMR	Product Hydrogen Before compressor	Product Hydrogen after compressor	CO2 Rich Gas	CO2 Free Gas
Stream Properties		Notes:						
Vapor Fraction			1	0	1	1	1	1
Temperature	°F		60	472	120	120	104	104
Pressure, abs.	psi		615	615	480	4015	10	10
Pressure, gauge	psi		600	600	465	4000	7.25	7.25
Mass Flow	lb/hr		3,541	10,954	948	948	13,979	25,981
Act. Volume Flow	MMcf/d		0.04	0.01	0.15	0.04	3.63	13.39
Molecular Weight			17.5	18	2.02	2.02	30.8	28.16
Vapor Phase Properties								
Std. Volume Flow	MMscfd		1.84		4.28	4.28	2.28	8.39
Mass Density	lb/ft^3		2.19		0.15	0.59	0.07	0.05
Dynamic Viscosity	cP		0.01		0.01	0.02	0.01	0.02
Compressibility			0.88		1.02	1.07	1	0.9998
Thermal Conductivity	Btu/hr-ft-°F		0.02		0.11	0.19	0.01	0.016
Specific Heat Capacity	Btu/lb-°F		0.6		3.39	3.51	0.22	0.25
Molecular Weight			17.5		2.02	2.02	41.2	28.16
Liquid Phase Properties								
Std. Volume Flow	MMcf/d							
Mass Density	lb/ft^3			50.1			62.2	
Dynamic Viscosity	cP			0.11			0.65	
Thermal Conductivity	Btu/hr-ft-°F			0.36			0.36	
Surface Tension	dyne/cm			27.4			69.5	
Specific Heat Capacity	Btu/lb-°F			1.15			1	
Molecular Weight				18			18	
Component Flows		Mol. Wt.						
Hydrogen	lbmole/hr	2.016			470.4	470.4		
Ethylene	lbmole/hr	28.054						
CO	lbmole/hr	28.011						
CO2	lbmole/hr	44.01					223.3	
H2O	lbmole/hr	18.015		608.0			230.5	
Methane	lbmole/hr	16.043	186.01					
Oxygen	lbmole/hr	32						34.9
Nitrogen	lbmole/hr	28.013						887.6
Ethane	lbmole/hr	30.07	14.2					0.01
Propane	lbmole/hr	44.097	1.0					
n-Butane	lbmole/hr	58.124						
n-Pentane	lbmole/hr	72.151						
n-Hexane	lbmole/hr	86.178	1.0					
n-Heptane	lbmole/hr	100.21						
n-Octane	lbmole/hr	114.23						
Propene	lbmole/hr	42.081						
1-Butene	lbmole/hr	56.108						
1-Pentene	lbmole/hr	70.135						
1-Hexene	lbmole/hr	84.162						

BLACK & VEATCH

CONFIDENTIAL

Rev.	Date	Revisions and Record of Issue	By	Checked	Approved
A	23-SEP-22	ISSUED FOR REVIEW	TBS	ND	MF
B	04-OCT-22	ISSUED FOR REVIEW	TBS	ND	MF

Feasibility Study for Cheyenne Prairie Generating Station (CPGS)

MATERIAL BALANCE - DESIGN CASE (Green Hydrogen)

B&V Doc. No.: 412239-0000-P0001 | Rev. B

Client Doc. No.: | Rev.

Sheet 3 | Page 3 of 3

Stream:			1	2	3
Desc.:			DM water to Electrolyzer	Hydrogen from dryer	Product Hydrogen after compressor
Stream Properties		Notes:			
Vapor Fraction			0	1	1
Temperature	°F		120	120	120
Pressure, abs.	psi		232.3	232.3	4015
Pressure, gauge	psi		217.5	217.5	4000
Mass Flow	lb/hr		37,920	948	948
Act. Volume Flow	MMcf/d		0.018	0.31	0.04
Molecular Weight			18	2.02	2.02
Vapor Phase Properties					
Std. Volume Flow	MMscfd			4.28	4.28
Mass Density	lb/ft^3			0.07	0.59
Dynamic Viscosity	cP			0.01	0.02
Compressibility				1.01	1.07
Thermal Conductivity	Btu/hr-ft-°F			0.11	0.19
Specific Heat Capacity	Btu/lb-°F			3.39	3.51
Molecular Weight				2.02	2.02
Liquid Phase Properties					
Std. Volume Flow	MMcf/d				
Mass Density	lb/ft^3		50.1		
Dynamic Viscosity	cP		0.11		
Thermal Conductivity	Btu/hr-ft-°F		0.36		
Surface Tension	dyne/cm		27.4		
Specific Heat Capacity	Btu/lb-°F		1.15		
Molecular Weight			18		
Component Flows		Mol. Wt.			
Hydrogen	lbmole/hr	2.016		470.358	470.358
Ethylene	lbmole/hr	28.054			
CO	lbmole/hr	28.011			
CO2	lbmole/hr	44.01			
H2O	lbmole/hr	18.015	2107		
Methane	lbmole/hr	16.043			
Oxygen	lbmole/hr	32			
Nitrogen	lbmole/hr	28.013			
Ethane	lbmole/hr	30.07			
Propane	lbmole/hr	44.097			
n-Butane	lbmole/hr	58.124			
n-Pentane	lbmole/hr	72.151			
n-Hexane	lbmole/hr	86.178			
n-Heptane	lbmole/hr	100.21			
n-Octane	lbmole/hr	114.23			
Propene	lbmole/hr	42.081			
1-Butene	lbmole/hr	56.108			
1-Pentene	lbmole/hr	70.135			
1-Hexene	lbmole/hr	84.162			

Appendix C. Utility Summary

Preliminary Electrical Load List – CPGS Green Hydrogen Electrolyzer

Load Description	QTY Installed	QTY Operating	Horsepower	kW Each	kW Total	Power Factor	kVA Each	kVA Total	Amps Each	Amps Total:	Voltage
Electrolyzer - 4 MW module Each, 15 bar discharge (End of life)	6	6		4,000	24,000	0.85	4,705	28,235			
H2 Compressors, 15 bar suction, 4,000 psi discharge	2	2	700	580	1,160	0.85	682	1,364			4160
Fin-fan Cooler, 39.5 MMBTU/hr rejection)	1	1		197	197	0.85	231	231			480
Closed Cooling Water Pumps (Fin Fan), 6,240 gpm, 12 psid	2	1	55	46	46	0.85	54	54			480
Water Treatment Pumps, 1 pump/module, sized conservatively, 76 gpm, 218 psid	1	1	10	8	8	0.85	10	10			480
Instrument Air Compressors/Dryers	2	1	50	41	41	0.85	49	49			480
Control System/Panel	2	2		6	12	0.85	7	14			120
Miscellaneous Loads (Controls, Lighting, etc.)	1	1		45	45	0.85	53	53			480
Total Loads			**815**		**25,509**			**30,010**			

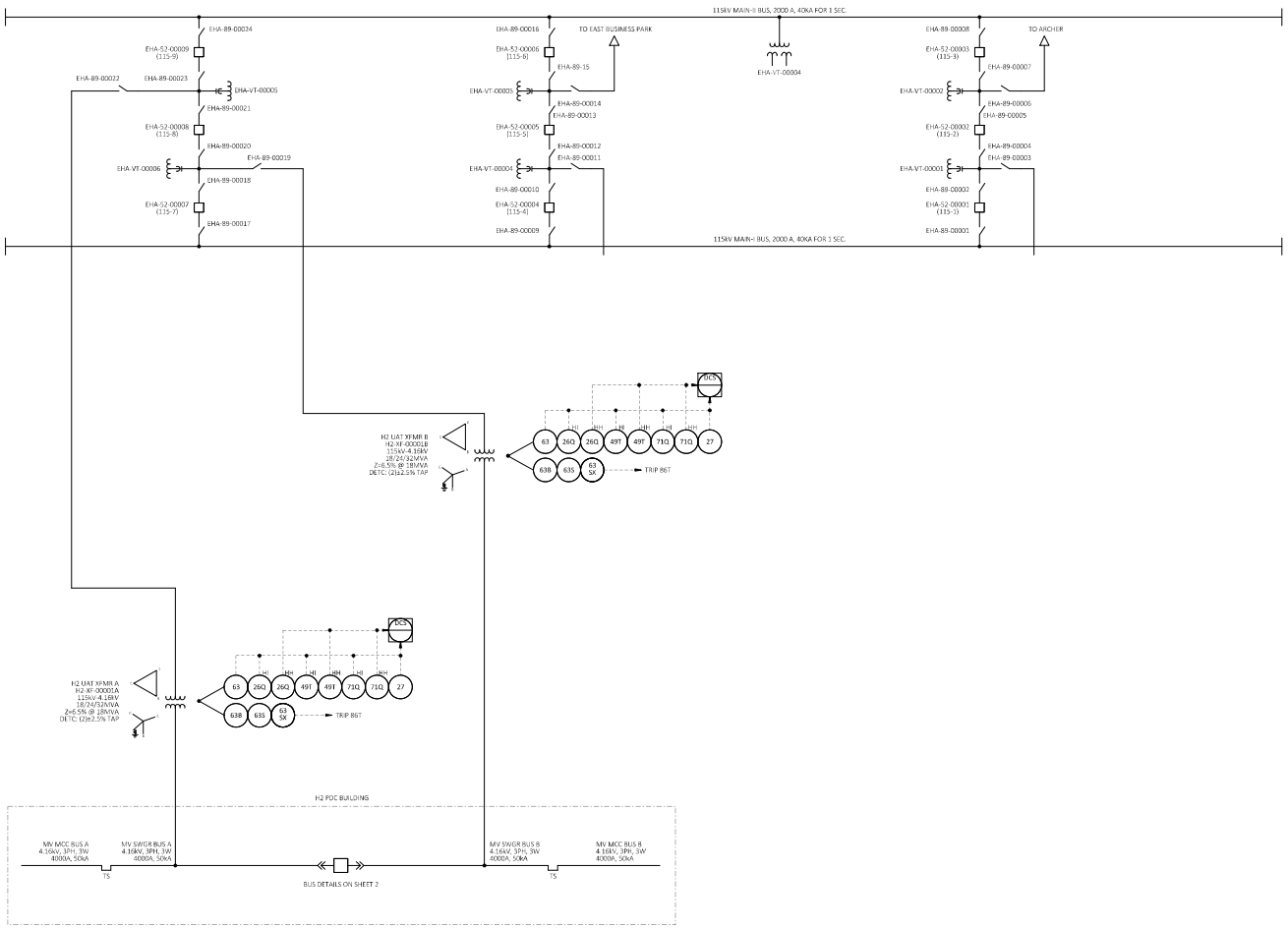

NOTES:

1. EQUIPMENT ARRANGEMENT AND RATINGS SHOWN ON THIS DRAWING ARE PRELIMINARY AND PROVIDED FOR INFORMATION ONLY.

REFERENCE DWGS:

BLACK HILLS DWGS:

EHA-E-00-1001 KEY ONE LINE DRAWING

NOT TO BE USED FOR CONSTRUCTION

THE DISTRIBUTION AND USE OF THE NATIVE FORMAT CAD FILE OF THIS DRAWING IS UNCONTROLLED. THE USER SHALL VERIFY TRACEABILITY OF THIS DRAWING TO THE LATEST CONTROLLED VERSION.

NO	DATE	REVISIONS AND RECORD OF ISSUE	DRN	DES	CHK	PDE	APP

I HEREBY CERTIFY THAT THIS DOCUMENT WAS PREPARED BY ME OR UNDER MY DIRECT SUPERVISION AND THAT I AM A DULY REGISTERED PROFESSIONAL ENGINEER UNDER THE LAWS OF THE STATE OF XXXX

SIGNED

DATE REG NO.

BLACK & VEATCH Building a world of difference.

DESIGNER | DRAWN

CHECKED | DATE

BLACK HILLS CHEYENNE PRAIRIE

H2 PROJECT

OVERALL ELECTRICAL ONE-LINE DIAGRAM

PROJECT | DRAWING NUMBER | REV

CODE

AREA

NOTES:

1. EQUIPMENT ARRANGEMENT AND RATINGS SHOWN ON THIS DRAWING ARE PRELIMINARY AND PROVIDED FOR INFORMATION ONLY.

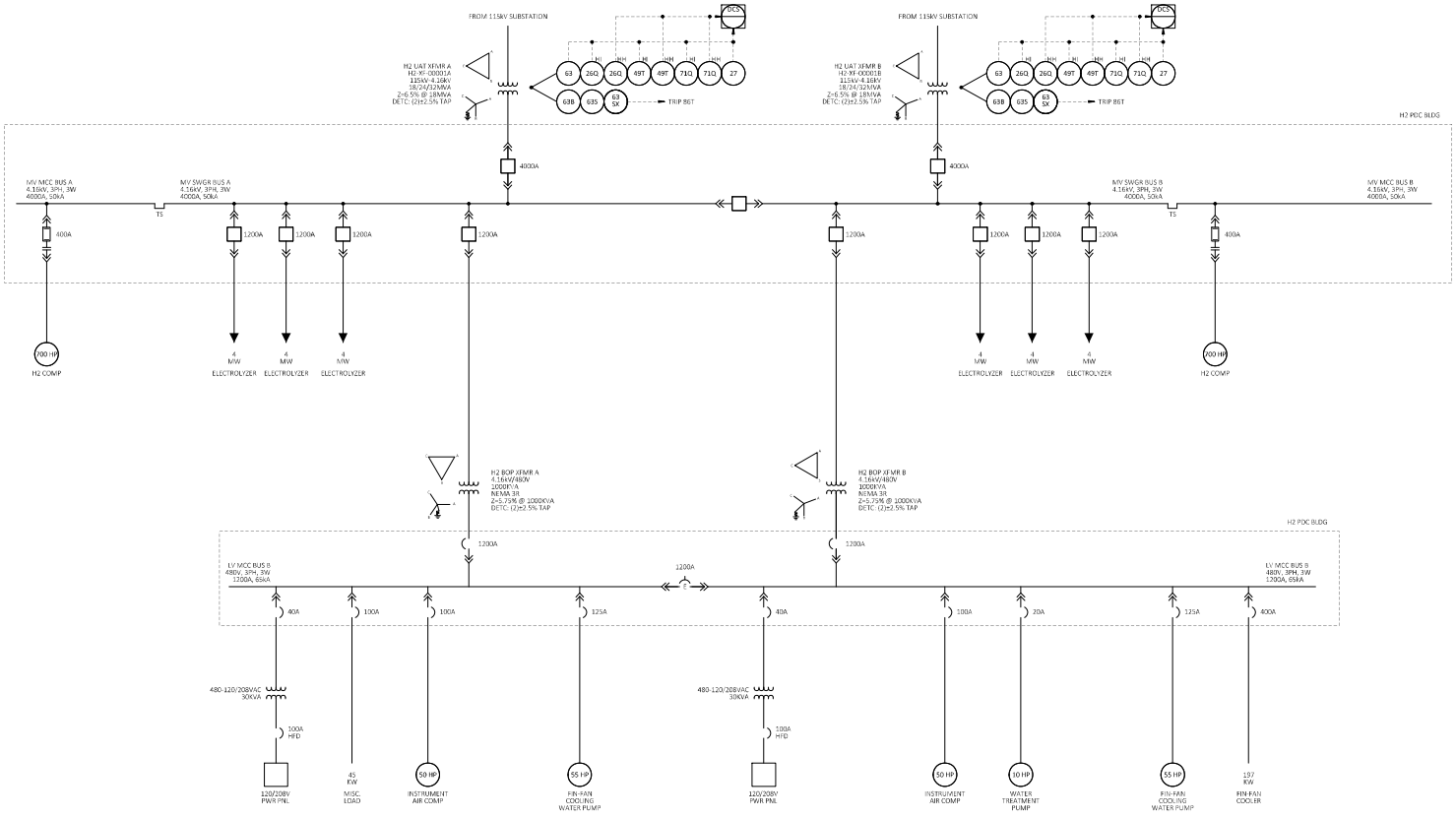

REFERENCE DWGS:

NOT TO BE USED FOR CONSTRUCTION

THE DISTRIBUTION AND USE OF THE NATIVE FORMAT CAD FILE OF THIS DRAWING IS UNCONTROLLED. THE USER SHALL VERIFY TRACEABILITY OF THIS DRAWING TO THE LATEST CONTROLLED VERSION.

NO	DATE	REVISIONS AND RECORD OF ISSUE	DRN	DES	CHK	PDE	APP

I HEREBY CERTIFY THAT THIS DOCUMENT WAS PREPARED BY ME OR UNDER MY DIRECT SUPERVISION AND THAT I AM A DULY REGISTERED PROFESSIONAL ENGINEER UNDER THE LAWS OF THE STATE OF XXXX

SIGNED

DATE REG NO.

BLACK & VEATCH Building a world of difference.

DESIGNED | DRAWN

CHECKED | DATE

BLACK HILLS CHEYENNE PRAIRIE
H2 PROJECT
OVERALL ELECTRICAL
ONE-LINE DIAGRAM

PROJECT | DRAWING NUMBER | REV

CODE

AREA

Appendix D. General Arrangement

CONFIDENTIAL

NOT TO BE USED FOR CONSTRUCTION

NO	DATE	REVISIONS AND RECORD OF ISSUE	DRN	DES	CHK	PDE	APP
B	12/OCT/2022	ISSUED FOR REVIEW	ADG	ADG	MAF	MAF	MAF
A	23/SEP/2022	ISSUED FOR INTERNAL REVIEW	ADG	ADG	MAF	MAF	MAF

N

50' 25' 0 50' 100'
1"=50'

BLACK & VEATCH

DESIGNER	ADG
DRAWN	ADG
CHECKED	MAF
DATE	12/OCT/2022

BLACK HILLS ENERGY
CHEYENNE PRAIRIE GENERATING STATION

GENERAL ARRANGEMENT
H2 COFIRE FEASIBILITY STUDY
TEMPORARY TEST BURN

PROJECT / DRAWING NUMBER: 412239-0000-G2001
REV: B
CODE
AREA

MicroStation v10.16.2.251
Full Size 1 = 1
g#71593
Model: 3D
03/28/2022 01:26 PM

CONFIDENTIAL

NOT TO BE USED FOR CONSTRUCTION

THE DISTRIBUTION AND USE OF THE NATIVE FORMAT CAD FILE OF THIS DRAWING IS UNCONTROLLED. THE USER SHALL VERIFY TRACEABILITY OF THIS DRAWING TO THE LATEST CONTROLLED VERSION.

NO	DATE	REVISIONS AND RECORD OF ISSUE	DRN	DES	CHK	PDE	APP
B	12/OCT/2022	ISSUED FOR REVIEW	ADG	ADG	MAF	MAF	MAF
A	10/OCT/2022	ISSUED FOR INTERNAL REVIEW	ADG	ADG	MAF	MAF	MAF

N

50' 25' 0 50' 100'
1"=50'

BLACK & VEATCH

DESIGNER	ADG
DRAWN	ADG
CHECKED	MAF
DATE	12/OCT/2022

BLACK HILLS ENERGY
CHEYENNE PRAIRIE GENERATING STATION

GENERAL ARRANGEMENT
H2 COFIRE FEASIBILITY STUDY
H2 SMR - BLUE

PROJECT / DRAWING NUMBER: 412239-0000-G2003
REV: B
CODE
AREA

MicroStation v10.16.2.251
Full Size 1 = 1
g#71959
MAF/ADG
03/28/2022 01:26 PM

CONFIDENTIAL

NOT TO BE USED FOR CONSTRUCTION

THE DISTRIBUTION AND USE OF THE NATIVE FORMAT CAD FILE OF THIS DRAWING IS UNCONTROLLED. THE USER SHALL VERIFY TRACEABILITY OF THIS DRAWING TO THE LATEST CONTROLLED VERSION.

NO	DATE	REVISIONS AND RECORD OF ISSUE	DRN	DES	CHK	PDE	APP
B	12/OCT/2022	ISSUED FOR REVIEW	ADG	ADG	MAF	MAF	MAF
A	10/OCT/2022	ISSUED FOR INTERNAL REVIEW	ADG	ADG	MAF	MAF	MAF

N

50' 25' 0 50' 100'

1"=50'

BLACK & VEATCH

DESIGNER ADG | DRAWN ADG | CHECKED MAF | DATE 12/OCT/2022

BLACK HILLS ENERGY
CHEYENNE PRAIRIE GENERATING STATION

GENERAL ARRANGEMENT
H2 COFIRE FEASIBILITY STUDY
H2 ELECTROLYSIS - GREEN

PROJECT / DRAWING NUMBER: 412239-0000-G2002

REV: B

CODE

AREA

MicroStation v10.16.2.251
Full Size 1 = 1
01:26 PM
g3f7595
Admin A
09/28/2022

Appendix E. Permitting Matrix

Temporary Test Burn									
Agency	**Permits, Plans, or Approvals**	**Regulatory Citation**	**Regulated Activity**	**Required for Project**	**Applicable Project Phase**	**Application Development Time**	**Agency Expected Review Time**	**Fees**	**Additional Comments**
Federal									
USFWS	Endangered Species Act Consultation Letter	50 CFR 402.03	Federal activities with the potential to affect federally listed species	Assume not required	Construction	n/a	n/a	n/a	Project involves modification to existing unit. Permitting/compliance should already be in place.
FAA	Notice of Proposed Construction or Alteration	14 CFR 77	Construction of a project that may impact the assurance of navigation facility signal reception	Assume required	Construction	2 Weeks	45 Days	n/a	Airport is located in Cheyenne, WY. Therefore, FAA notice will be required for any greenfield construction or use of cranes
EPA	National Environmental Policy Act Compliance	40 CFR 1500	Projects using federal funding, authorization, or sponsorship	Assume not required	Development	n/a	n/a	n/a	Project involves modification to existing unit. Permitting/compliance should already be in place.
EPA	SPCC Plan for Operational Activities	40 CFR 112	Aboveground storage of 1,320 gallons of oil on-site or one single storage container of 500 gallons on-site	Assume required	Operation	1 Month	None	None	SPCC plan for operation will be required. No SPCC plan for construction is anticipated.
EPA	Risk Management Plan (RMP)	40 CFR 68	Storage of potentially hazardous material/chemical	Assume required	Anytime hydrogen storage exceeded applicable limits	1-2 months	n/a	n/a	There is an exemption for facilities that use all of the regulated substance as "fuel" or held at a retail facility. Even if the site is exempt from the RMP they must still follow the General Duty Clause requiring the facility to meet industry standards for safety. The development time does not include the development of the RMP Prevention Program. The RMP program has a requirement for an off-site consequence analysis (OCA) which could be used to further identify risks of a hydrogen release to the surrounding public.
OSHA	Process Safety Management of Highly Hazardous Chemicals (PSM)	29 CFR 1910	Storage of potentially hazardous material/chemical	Assume required	Anytime hydrogen storage exceeded applicable limits	1-2 months	n/a	n/a	There is an exemption for hydrocarbon fuels used solely for workplace consumption as a fuel, if fuels are not part of a process containing another highly hazardous chemical covered by OSHA PSM. Hydrogen is not a hydrocarbon fuel and does not qualify for this exemption. The development time does not include the prevention program
USACE	Section 10/404 Permits	33 CFR 330	Section 10: Construction activities in navigable WOTUS Section 404: Fill or discharge in WOTUS	Assume not required	Construction	n/a	n/a	n/a	Project involves modification to existing unit. Permitting/compliance should already be in place.
State of Wyoming									
WDEQ- AQD	Air Construction Permit/Waiver	WAQSR - Chapter 6, Section 2	The construction of a new facility or modification of an existing facility or source.	Assume required	Construction	2 Months	3-6 Months	$500 + $75 per hour fee for processing	The Project must first obtain a construction permit, modification, or waiver authorizing the proposed change made to the operation of the facility. This must be obtained prior to construction/installation of the change. In this case, it is anticipated that the turbines on-site will be operating on a hydrogen/natural gas blend. Typically, this will require a permit as condition (F6)(d) of the current operating permit for the facility states that the combustion turbines shall be limited to pipeline natural gas as a fuel. Under Chapter 6, Section 2(k) of the Wyoming Air Quality Standards and Regulations (WAQSR), exemptions from obtaining an approval to construct or modify are listed. This list does not include an exemption for the use of an alternate fuel, or for a temporary process. Chapter 6, Section 2(k)(viii) lists an exemption for "such other minor sources which the Administrator determines to be insignificant in both emission rate and ambient air quality impact." This temporary modification may be granted an exemption by the administrator if the impact to air emissions is minimal, but as this is an existing major source, the air quality division would need to clarify this point. Further, it must be determined whether the proposed change to the project would be considered a major modification as defined under Chapter 6,

Temporary Test Burn									
Agency	**Permits, Plans, or Approvals**	**Regulatory Citation**	**Regulated Activity**	**Required for Project**	**Applicable Project Phase**	**Application Development Time**	**Agency Expected Review Time**	**Fees**	**Additional Comments**
									Section 4(a). If it is a major modification, this will significantly impact the complexity of the application and time before a permit is obtained. Likely will be at least one year from application filing date to obtain permit if modification is major. A pre-construction meeting or consultation with the air quality division may be helpful to determine whether a construction permit will be required or whether the project may obtain a waiver. If it is determined that impact to emissions and air quality as a result of the changes made to the facility will be insignificant, the Administrator may grant a waiver. But, the WAQSR does not list a specific exemption that guarantees a waiver will be granted in this case. A consultation with the air quality division may alleviate any impact to schedule caused by a potential waiver refusal.
WDEQ- AQD	Air Operating Permit	WAQSR - Chapter 6, Section 3	The operation of any emissions source with potential emissions that exceed that major source threshold.	Assume required	Operation	2 Months	5-9 Months, depending on whether modification is minor or significant	Annual fee of $34.50 per ton of emissions	If the Project is required to obtain a construction permit, then by Chapter 6, Section 3(c)(i)(B) of the WAQSR, the Project must also apply for an operating permit within twelve (12) months after commencing operation. The Project already has an active operating permit so this application would be filed as a modification to the existing operating permit. Per Chapter 6, Section 3(d)(vi), a permit modification is any revision to an operating permit that cannot be accomplished by an administrative permit amendment under Chapter 6, Section 3(d)(v). It does not appear that the revision would qualify for an administrative amendment, but it must be determined whether the modification would be considered minor or significant. The criteria for a minor permit modification is listed under Chapter 6, Section 3 (d)(vi)(A)(I) and the criteria for a significant permit modification is listed under Chapter 6, Section 3(d)(vi)(C)(I). WAQSR Ch 6, Sec 3(d)(iii) lists changes for which no permit revision is required. This is also listed in the Project's operating permit. If the proposed changes do not lead to an exceedance of emissions allowed under the permit, and the other conditions of this section are adhered to, then the Project may not need an operating permit revision. This may be especially the case if the Project is exempt from obtaining a construction permit. A pre-construction meeting with the air quality division at WDEQ may help clarify this point. Under Chapter 6, Section 3(d)(ii), the Project should be operating in compliance with the rules so long as an operating permit is submitted by the 12-month deadline.
WDEQ- WQD	WYPDES Industrial Storm Water General Permit	WDEQ Water Quality Chapter 2	A General Permit is required for stormwater discharges from facility operations	Assume not required	Operation	1 Month	1 month prior to discharge	n/a	Project involves modification to existing unit. Permitting/compliance should already be in place.
WDEQ- WQD	Small Wastewater System Permit	WDEQ Water Quality Chapter 2	Permit is required for the installation, repair, or replacement of small wastewater systems (septic tanks/leach fields)	Assume not required	Operation	n/a	n/a	n/a	Assume existing system will treat wastewater.
WDEQ- WQD	WYPDES Small Construction General Permit	WDEQ Water Quality Chapter 2	Discharge of storm water runoff from construction that disturb at least 1 acre but less than 5 acres	Assume required	Construction	1 month	1-2 months	See Fee Schedule: https://wywaste.wyo.gov/calc/wypdesfeecalc.html	Site disturbance should not be larger than five acres so construction activities should be covered under the Small Permit.

Temporary Test Burn									
Agency	**Permits, Plans, or Approvals**	**Regulatory Citation**	**Regulated Activity**	**Required for Project**	**Applicable Project Phase**	**Application Development Time**	**Agency Expected Review Time**	**Fees**	**Additional Comments**
WDEQ- WQD	WYPDES General Permit for Temporary Discharge	WDEQ Water Quality Chapter 2	Discharge of construction dewatering hydrostatic test waters, pump tests of water wells, etc.	Assume not required	Construction	n/a	n/a	n/a	Assume not required.
State Engineer's Office (SEO)	Permit to Appropriate Ground Water	WDEQ Water Quality Chapter 2	Approval to withdraw water for industrial uses, including dewatering.	Assume not required	Construction	n/a	n/a	n/a	Assume not required. Water will be withdrawn from potable water system.
SEO	Permit to Appropriate Surface Water	WDEQ Water Quality Chapter 2	Approval to withdraw water for industrial uses.	Assume not required	Construction	n/a	n/a	n/a	Assume not required. Water will be withdrawn from potable water system.
WDEQ- WQD	Underground Storage Tank Notification and Registration	WDEQ Storage Tanks Chapter 1	Notification and registration underground storage tanks	Assume required	Operation	2-4 weeks	1-2 months	n/a	Installation of above and underground storage tanks is anticipated. Notify WDEQ 30 days prior to installing, modifying, or closing tank. WDEQ will schedule onsite inspection.
WDEQ	Notification of Aboveground Storage Tank	WDEQ Storage Tanks Chapter 1	Storage, dispensage, and use of flammable or combustible liquids in aboveground tanks	Assume required	Operation	2-4 weeks	1-2 months	n/a	Installation of above and underground storage tanks is anticipated. Notify WDEQ 30 days prior to installing, modifying, or closing tank. WDEQ will schedule onsite inspection.
WDOT	Oversized/Overweight Permit	WDOT Code	All loads over legal size or weight limits entering the state must obtain approval through this permit	Assume required	Construction	1 month	1-2 months	TBD	Will be obtained by heaving hauling contractors.
Wyoming Department of Game and Fish (WDG&F)	State Endangered Species Act - Biological Opinion	Wyoming Game and Fish Commission Regulations Code	Confirmation of no impacts to threatened and endangered species.	Assume not required	Construction	n/a	n/a	n/a	Project involves modification to existing unit. Permitting/compliance should already be in place.
Wyoming Department of State Parks and Cultural Resources (WDSP&CR) / State Historic Preservation Office (SHPO)	Section 106 Review / Cultural Resources Survey	Wyoming State Parks & Cultural Resources Department Code	Confirmation of no impacts to any cultural or archaeological resources.	Assume not required	Construction	n/a	n/a	n/a	Project involves modification to existing unit. Permitting/compliance should already be in place.
State Fire Marshal	Fire Safety Approval	Wyoming State Code	Installation of fire protection system and approval of project for commercial operation.	Assume required	Operation	2-4 weeks	1-2 months	n/a	May defer to County Fire Warden. Modifications may need to be approved for fire safety.
Laramie County									
Laramie County	Pre-Application Meeting	Laramie County Planning and Development Office	Required before submittal of any development application to the County office.	Assume required	Construction	n/a	n/a	n/a	Call (307) 775-7451 to schedule a Pre–Application Meeting. County will identify all permits/applications needed for the project.
Laramie County	Zone Change Application	Laramie County Planning and Development Office	Zoning approval required if a proposed project does not comply with the site's current designated use	Assume not required	Construction	n/a	n/a	n/a	Project involves modification to existing unit. Permitting/compliance should already be in place.
Laramie County	Commercial Permit	Laramie County Planning and Development Office	Required for new, additional, or renovations to commercial buildings	Assume required	Construction	1 Month	1-2 months	Refer to Fee Schedule: https://www.laramiecountywy.gov/_departments/PlanningDevelopment/_pdfs/2021/building%20permit%20fee%20schedule%20120621.pdf	Project could qualify for revision to existing building permit. If only temporary construction trailers are on-site, commercial permit may not be needed but will be up to Laramie County requirements. https://www.laramiecountywy.gov/_departments/PlanningDevelopment/_pdfs/2022/Commerical-New,%20Addition,%20Renovation.pdf

Temporary Test Burn									
Agency	**Permits, Plans, or Approvals**	**Regulatory Citation**	**Regulated Activity**	**Required for Project**	**Applicable Project Phase**	**Application Development Time**	**Agency Expected Review Time**	**Fees**	**Additional Comments**
Laramie County	Commercial Wastewater System Permit	Laramie County Health Department	All small wastewater systems must be permitted prior to installation, repair, or modification	Assume not required	Operation	n/a	n/a	n/a	Assume existing system will treat wastewater.
Laramie County	Temporary Use Permit	Laramie County Planning and Development Office	Required for temporary construction trailers	Assume required	Construction	1 month	1-2 months	$100	Construction trailers will be utilized. https://www.laramiecountywy.gov/_departments/planningdevelopment/_pdfs/2022/Temporary%20Use%20Permit.pdf
Laramie County	Sign Permit	Laramie County Planning and Development Office	Required for any sign	Assume not required	Construction	n/a	n/a	n/a	Assume not required unless sign is erected on site.
Laramie County	Demolition Permit	Laramie County Planning and Development Office	Required for any demolition work	Assume required	Construction	1 month	1-2 months	$100	https://www.laramiecountywy.gov/_departments/PlanningDevelopment/_pdfs/2022/Demolition%20for%20Commerical%20and.or%20Residential%20App%206.15.22.pdf
Laramie County	Access Permit	Laramie County Public Works Department	Required for roadwork access construction for new or modified driveway	Assume required	Construction	1-2 weeks	1 month	$50	Must be obtained prior to building construction. https://www.laramiecountywy.gov/_departments/publicworks/_pdfs/2021/Access%20Permit%20Application%20Effective%207.20.21%20Fillable.pdf
Laramie County	Road Construction Permit	Laramie County Public Works Department	Required for road and culvert construction	Assume required	Construction	1-2 weeks	1 month	TBD	https://www.laramiecountywy.gov/_departments/publicworks/_pdfs/2016/Access%20Drive-Utility-Road%20Const%20%20Permit.pdf
Laramie County	Oversized/Overweight Permit	Laramie County Public Works Department	Operation of oversize and overweight loads on Laramie County Roads	Assume required	Construction	1-2 weeks	1 month	TBD	https://www.laramiecountywy.gov/_departments/publicworks/_pdfs/2022/Oversize-Overweight%20Permit.pdf
Laramie County	Floodplain Development Permit	Laramie County Planning and Development Office	Required for development in a floodplain	Assume not required	Construction	n/a	n/a	n/a	Project involves modification to existing unit. Permitting/compliance should already be in place.
Laramie County	Environmental and Services Impact Report	Laramie County Planning and Development Office	Required to be submitted with a preliminary plat application and should be a thorough assessment of the impacts of the proposed project	Assume required	Construction	1 month	1-2 months	n/a	May be required if pre-development meeting decides a preliminary plat application is necessary for project. https://www.laramiecountywy.gov/_departments/PlanningDevelopment/_pdfs/2021/eisr.pdf
Laramie County	Grading, Erosion and Sediment Control Permit	Laramie County Planning and Development Office	A Standard GESC Permit is required for all land-disturbing activities that disturb 1 acre or more of land. Redevelopment activities that disturb less than 1 acre require a Standard GESC Permit	Assume required	Construction	1 Month	1-2 months	n/a	https://www.laramiecountywy.gov/_departments/PlanningDevelopment/_pdfs/2019/NEW_GESC_APP_PKG_2019_LCLUR.pdf

Acronyms

AQD - Air Quality Department
CAAA - Clean Air Act Amendments of 1990
CFR - Code of Federal Regulations
USACE - US Army Corps of Engineers
EA - Environmental Assessment
EIS - Environmental Impact Statement
EPA - Environmental Protection Agency
FAA - Federal Aviation Administration
GESC - Grading and Erosion Sediment Control
NEPA - National Environmental Policy Act
NOI - Notice of Intent
NSR - New Source Review
OCA - Off-site Consequence Analysis
OSHA - Occupational Safety and Health Administration
PSM - Process Safety Management
SEO - State Engineer's Office
SHPO - State Historic Preservation Office
SPCC - Spill Prevention, Control and Countermeasure
SWPPP - Stormwater Pollution Prevention Plan
RMP - Risk Management Plan
ROW - Right-of-Way
TBD - to be determined
USFWS - US Fish and Wildlife Service
WAQSR - Wyoming Air Quality Standards and Regulations
WDEQ - Wyoming Department of Environmental Quality
WDG&F - Wyoming Department of Game & Fish
WDOT - Wyoming Department of Transportation
WDSP&CR - Wyoming Department of State Park & Cultural Resources
WOTUS - Waters of the United States
WQD - Water Quality Department
WYPDES- Wyoming Pollutant Discharge Elimination System

Blue Hydrogen Feasibility									
Agency	Permits, Plans, or Approvals	Regulatory Citation	Regulated Activity	Required for Project	Applicable Project Phase	Application Development Time	Agency Expected Review Time	Fees	Additional Comments
Federal									
USFWS	Endangered Species Act Consultation Letter	50 CFR 402.03	Federal activities with the potential to affect federally listed species	Assume required	Construction	2 Weeks	1 Month	n/a	n/a
FAA	Notice of Proposed Construction or Alteration	14 CFR 77	Construction of a project that may impact the assurance of navigation facility signal reception	Assume required	Construction	2 Weeks	45 Days	n/a	Airport is located in Cheyenne, WY. Therefore, FAA notice will be required for any greenfield construction or use of cranes
EPA	National Environmental Policy Act Compliance	40 CFR 1500	Projects using federal funding, authorization, or sponsorship	Assume not required	Development	6-12 Months	Environmental Assessment: 3-6 Months Environmental Impact Statement: 12-24 Months	n/a	Project involves modification to existing unit. Permitting/compliance should already be in place.
EPA	SPCC Plan for Operational Activities	40 CFR 112	Aboveground storage of 1,320 gallons of oil on-site or one single storage container of 500 gallons on-site	Assume required	Operation	1 Month	n/a	n/a	SPCC plan for operation will be required. No SPCC plan for construction is anticipated.
EPA	Risk Management Plan (RMP)	40 CFR 68	Storage of potentially hazardous material/chemical	Assume required	Anytime hydrogen storage exceeded applicable limits	1-2 months	n/a	n/a	There is an exemption for facilities that use all of the regulated substance as "fuel" or held at a retail facility. Even if the site is exempt from the RMP they must still follow the General Duty Clause requiring the facility to meet industry standards for safety. The development time does not include the development of the RMP Prevention Program. The RMP program has a requirement for an off-site consequence analysis (OCA) which could be used to further identify risks of a hydrogen release to the surrounding public.
OSHA	Process Safety Management of Highly Hazardous Chemicals (PSM)	29 CFR 1910	Storage of potentially hazardous material/chemical	Assume required	Anytime hydrogen storage exceeded applicable limits	1-2 months	n/a	n/a	There is an exemption for hydrocarbon fuels used solely for workplace consumption as a fuel, if fuels are not part of a process containing another highly hazardous chemical covered by OSHA PSM. Hydrogen is not a hydrocarbon fuel and does not qualify for this exemption. The development time does not include the prevention program
USACE	Section 10/404 Permits	33 CFR 330	Section 10: Construction activities in navigable WOTUS Section 404: Fill or discharge in WOTUS	Assume not required	Construction	n/a	n/a	n/a	Project involves modification to existing unit. Permitting/compliance should already be in place.
State of Wyoming									
WDEQ- AQD	Air Construction Permit/Waiver	WAQSR - Chapter 6, Section 2	The construction of a new facility or modification of an existing facility or source.	Assume required	Construction	2 Months	3-6 Months	$500 + $75 per hour fee for processing	The Project must first obtain a construction permit, modification, or waiver authorizing the proposed change made to the operation of the facility. In this case, it is anticipated that the turbines on-site will be operating on a hydrogen/natural gas blend. This will likely require a permit as condition (F6)(d) of the current operating permit for the facility states that the combustion turbines shall be limited to pipeline natural gas as a fuel. Under Chapter 6, Section 2(k) of the Wyoming Air Quality Standards and Regulations (WAQSR), exemptions from obtaining an approval to construct or modify are listed. This list does not include an exemption for the use of an alternate fuel. Further, it must be determined whether the proposed change to the project would be considered a major modification as defined under Chapter 6, Section 4(a). If it is a major modification, this will significantly impact the complexity of the

Blue Hydrogen Feasibility									
Agency	**Permits, Plans, or Approvals**	**Regulatory Citation**	**Regulated Activity**	**Required for Project**	**Applicable Project Phase**	**Application Development Time**	**Agency Expected Review Time**	**Fees**	**Additional Comments**
									application and time before a permit is obtained. Likely will be at least one year from application filing date to obtain permit if modification is major. If any additional emitting equipment will need to be installed for the purpose of blue hydrogen production, this equipment must be included in the construction permit and counted towards the facility emissions total so long as an exemption does not exist under Ch 6, Sec 2(k) of the WAQSR.
WDEQ- AQD	Air Operating Permit	WAQSR - Chapter 6, Section 3	The operation of any emissions source with potential emissions that exceed that major source threshold.	Assume required	Operation	2 Months	5-9 Months, depending on whether modification is minor or significant	Annual fee of $34.50 per ton of emissions	If the Project is required to obtain a construction permit, then by Chapter 6, Section 3(c)(i)(B) of the WAQSR, the Project must also apply for an operating permit within twelve (12) months after commencing operation. The Project already has an active operating permit so this application would be filed as a modification to the existing operating permit. Per Chapter 6, Section 3(d)(vi), a permit modification is any revision to an operating permit that cannot be accomplished by an administrative permit amendment under Chapter 6, Section 3(d)(v). It does not appear that the revision would qualify for an administrative amendment, but it must be determined whether the modification would be considered minor or significant. The criteria for a minor permit modification is listed under Chapter 6, Section 3 (d)(vi)(A)(I) and the criteria for a significant permit modification is listed under Chapter 6, Section 3(d)(vi)(C)(I). Under Chapter 6, Section 3(d)(ii), the Project should be operating in compliance with the rules so long as an operating permit is submitted by the 12-month deadline.
WDEQ- WQD	WYPDES Industrial Storm Water General Permit	WDEQ Water Quality Chapter 2	A General Permit is required for stormwater discharges from facility operations	Assume not required	Operation	n/a	n/a	n/a	Project involves modification to existing unit. Permitting/compliance should already be in place.
WDEQ- WQD	Small Wastewater System Permit	WDEQ Water Quality Chapter 2	Permit is required for the installation, repair, or replacement of small wastewater systems (septic tanks/leach fields)	Assume required	Operation	1-2 months	1-2 months	n/a	Assume existing system will treat wastewater.
WDEQ- WQD	WYPDES Small Construction General Permit	WDEQ Water Quality Chapter 2	Discharge of storm water runoff from construction that disturb at least 1 acre but less than 5 acres	Assume required	Construction	1 month	1-2 months	See Fee Schedule: https://wywaste.wyo.gov/calc/wypdesfeecalc.html	Site disturbance should not be larger than five acres so construction activities should be covered under the Small Permit.
WDEQ- WQD	WYPDES General Permit for Temporary Discharge	WDEQ Water Quality Chapter 2	Discharge of construction dewatering hydrostatic test waters, pump tests of water wells, etc.	Assume not required	Construction	n/a	n/a	n/a	Assume not required.
State Engineer's Office (SEO)	Permit to Appropriate Ground Water	WDEQ Water Quality Chapter 2	Approval to withdraw water for industrial uses, including dewatering.	Assume not required	Construction	n/a	n/a	n/a	Assume not required. Water will be withdrawn from potable water system.
SEO	Permit to Appropriate Surface Water	WDEQ Water Quality Chapter 2	Approval to withdraw water for industrial uses.	Assume not required	Construction	n/a	n/a	n/a	Assume not required. Water will be withdrawn from potable water system.
WDEQ- WQD	Underground Storage Tank Notification and Registration	WDEQ Storage Tanks Chapter 1	Notification and registration underground storage tanks	Assume required	Operation	2-4 weeks	1-2 months	n/a	Installation of above and underground storage tanks is anticipated. Notify WDEQ 30 days prior to installing, modifying, or closing tank. WDEQ will schedule onsite inspection.
WDEQ	Notification of Aboveground Storage Tank	WDEQ Storage Tanks Chapter 1	Storage, dispensage, and use of flammable or combustible liquids in aboveground tanks	Assume required	Operation	2-4 weeks	1-2 months	n/a	Installation of above and underground storage tanks is anticipated. Notifty WDEQ 30 days prior to installing, modifying, or closing tank. WDEQ will schedule onsite inspection.

Blue Hydrogen Feasibility									
Agency	**Permits, Plans, or Approvals**	**Regulatory Citation**	**Regulated Activity**	**Required for Project**	**Applicable Project Phase**	**Application Development Time**	**Agency Expected Review Time**	**Fees**	**Additional Comments**
WDOT	Oversized/Overweight Permit	WDOT Code	All loads over legal size or weight limits entering the state must obtain approval through this permit	Assume required	Construction	1 month	1-2 months	TBD	Will be obtained by heaving hauling contractors.
Wyoming Department of Game and Fish (WDG&F)	State Endangered Species Act - Biological Opinion	Wyoming Game and Fish Commission Regulations Code	Confirmation of no impacts to threatened and endangered species.	Assume not required	Construction	n/a	n/a	n/a	Project involves modification to existing unit. Permitting/compliance should already be in place.
Wyoming Department of State Parks and Cultural Resources (WDSP&CR) / State Historic Preservation Office (SHPO)	Section 106 Review / Cultural Resources Survey	Wyoming State Parks & Cultural Resources Department Code	Confirmation of no impacts to any cultural or archaeological resources.	Assume not required	Construction	n/a	n/a	n/a	Project involves modification to existing unit. Permitting/compliance should already be in place.
State Fire Marshal	Fire Safety Approval	Wyoming State Code	Installation of fire protection system and approval of project for commercial operation.	Assume required	Operation	2-4 weeks	1-2 months	n/a	May defer to County Fire Warden. Modifications may need to be approved for fire safety.
Laramie County									
Laramie County	Pre-Application Meeting	Laramie County Planning and Development Office	Required before submittal of any development application to the County office.	Assume required	Construction	n/a	n/a	n/a	Call (307) 775-7451 to schedule a Pre–Application Meeting. County will identify all permits/applications needed for the project.
Laramie County	Zone Change Application	Laramie County Planning and Development Office	Zoning approval required if a proposed project does not comply with the site's current designated use	Assume not required	Construction	n/a	n/a	n/a	Project involves modification to existing unit. Permitting/compliance should already be in place.
Laramie County	Commercial Permit	Laramie County Planning and Development Office	Required for new, additional, or renovations to commercial buildings	Assume required	Construction	1 month	1-2 months	Refer to Fee Schedule: https://www.laramiecountywy.gov/_departments/PlanningDevelopment/_pdfs/2021/building%20permit%20fee%20schedule%20120621.pdf	Project could qualify for revision to existing building permit. https://www.laramiecountywy.gov/_departments/PlanningDevelopment/_pdfs/2022/Commerical-New,%20Addition,%20Renovation.pdf
Laramie County	Commercial Wastewater System Permit	Laramie County Health Department	All small wastewater systems must be permitted prior to installation, repair, or modification	Assume not required	Operation	1 month	1-2 months	Inspection fee: $375	Assume existing system will treat wastewater.
Laramie County	Temporary Use Permit	Laramie County Planning and Development Office	Required for temporary construction trailers	Assume required	Construction	1 month	1-2 months	$100	Construction trailers will be utilized. https://www.laramiecountywy.gov/_departments/planningdevelopment/_pdfs/2022/Temporary%20Use%20Permit.pdf
Laramie County	Sign Permit	Laramie County Planning and Development Office	Required for any sign	Assume not required	Construction	n/a	n/a	n/a	Assume not required unless sign is erected on site.
Laramie County	Demolition Permit	Laramie County Planning and Development Office	Required for any demolition work	Assume required	Construction	1 month	1-2 months	$100	https://www.laramiecountywy.gov/_departments/PlanningDevelopment/_pdfs/2022/Demolition%20for%20Commerical%20and.or%20Residential%20App%206.15.22.pdf
Laramie County	Access Permit	Laramie County Public Works Department	Required for roadwork access construction for new or modified driveway	Assume required	Construction	1-2 weeks	1 month	$50	Must be obtained prior to building construction. https://www.laramiecountywy.gov/_departments/publicworks/_pdfs/2021/Access%20Permit%20Application%20Effective%207.20.21%20Fillable.pdf

Blue Hydrogen Feasibility									
Agency	**Permits, Plans, or Approvals**	**Regulatory Citation**	**Regulated Activity**	**Required for Project**	**Applicable Project Phase**	**Application Development Time**	**Agency Expected Review Time**	**Fees**	**Additional Comments**
Laramie County	Road Construction Permit	Laramie County Public Works Department	Required for road and culvert construction	Assume required	Construction	1-2 weeks	1 month	TBD	https://www.laramiecountywy.gov/_departments/publicworks/_pdfs/2016/Access%20Drive-Utility-Road%20Const%20%20Permit.pdf
Laramie County	Oversized/Overweight Permit	Laramie County Public Works Department	Operation of oversize and overweight loads on Laramie County Roads	Assume required	Construction	1-2 weeks	1 month	TBD	https://www.laramiecountywy.gov/_departments/publicworks/_pdfs/2022/Oversize-Overweight%20Permit.pdf
Laramie County	Floodplain Development Permit	Laramie County Planning and Development Office	Required for development in a floodplain	Assume not required	Construction	n/a	n/a	n/a	Project involves modification to existing unit. Permitting/compliance should already be in place.
Laramie County	Environmental and Services Impact Report	Laramie County Planning and Development Office	Required to be submitted with a preliminary plat application and should be a thorough assessment of the impacts of the proposed project	Assume required	Construction	1 month	1-2 months	n/a	May be required if pre-development meeting decides a preliminary plat application is necessary for project. https://www.laramiecountywy.gov/_departments/PlanningDevelopment/_pdfs/2021/eisr.pdf
Laramie County	Grading, Erosion and Sediment Control Permit	Laramie County Planning and Development Office	A Standard GESC Permit is required for all land-disturbing activities that disturb 1 acre or more of land. Redevelopment activities that disturb less than 1 acre require a Standard GESC Permit	Assume required	Construction	1 month	1-2 months	n/a	https://www.laramiecountywy.gov/_departments/PlanningDevelopment/_pdfs/2019/NEW_GESC_APP_PKG_2019_LCLUR.pdf

Acronyms

AQD - Air Quality Department
CAAA - Clean Air Act Amendments of 1990
CFR - Code of Federal Regulations
USACE - US Army Corps of Engineers
EA - Environmental Assessment
EIS - Environmental Impact Statement
EPA - Environmental Protection Agency
FAA - Federal Aviation Administration
GESC - Grading and Erosion Sediment Control
NEPA - National Environmental Policy Act
NOI - Notice of Intent
NSR - New Source Review
OCA - Off-site Consequence Analysis
OSHA - Occupational Safety and Health Administration
PSM - Process Safety Management
SEO - State Engineer's Office
SHPO - State Historic Preservation Office
SPCC - Spill Prevention, Control and Countermeasure
SWPPP - Stormwater Pollution Prevention Plan
RMP - Risk Management Plan
ROW - Right-of-Way
TBD - to be determined
USFWS - US Fish and Wildlife Service
WAQSR - Wyoming Air Quality Standards and Regulations
WDEQ - Wyoming Department of Environmental Quality
WDG&F - Wyoming Department of Game & Fish
WDOT - Wyoming Department of Transportation
WDSP&CR - Wyoming Department of State Park & Cultural Resources
WOTUS - Waters of the United States
WQD - Water Quality Department
WYPDES- Wyoming Pollutant Discharge Elimination System

Green Hydrogen Feasibility									
Agency	Permits, Plans, or Approvals	Regulatory Citation	Regulated Activity	Required for Project	Applicable Project Phase	Application Development Time	Agency Expected Review Time	Fees	Additional Comments
Federal									
USFWS	Endangered Species Act Consultation Letter	50 CFR 402.03	Federal activities with the potential to affect federally listed species	Assume required	Construction	2 Weeks	1 Month	n/a	n/a
FAA	Notice of Proposed Construction or Alteration	14 CFR 77	Construction of a project that may impact the assurance of navigation facility signal reception	Assume required	Construction	2 Weeks	45 Days	n/a	Airport is located in Cheyenne, WY. Therefore, FAA notice will be required for any greenfield construction or use of cranes
EPA	National Environmental Policy Act Compliance	40 CFR 1500	Projects using federal funding, authorization, or sponsorship	Assume not required	Development	6-12 Months	Environmental Assessment: 3-6 Months Environmental Impact Statement: 12-24 Months	n/a	Project involves modification to existing unit. Permitting/compliance should already be in place.
EPA	SPCC Plan for Operational Activities	40 CFR 112	Aboveground storage of 1,320 gallons of oil on-site or one single storage container of 500 gallons on-site	Assume required	Operation	1 month	n/a	n/a	SPCC plan for operation will be required. No SPCC plan for construction is anticipated.
EPA	Risk Management Plan (RMP)	40 CFR 68	Storage of potentially hazardous material/chemical	Assume required	Anytime hydrogen storage exceeded applicable limits	1-2 months	n/a	n/a	There is an exemption for facilities that use all of the regulated substance as "fuel" or held at a retail facility. Even if the site is exempt from the RMP they must still follow the General Duty Clause requiring the facility to meet industry standards for safety. The development time does not include the development of the RMP Prevention Program. The RMP program has a requirement for an off-site consequence analysis (OCA) which could be used to further identify risks of a hydrogen release to the surrounding public.
OSHA	Process Safety Management of Highly Hazardous Chemicals (PSM)	29 CFR 1910	Storage of potentially hazardous material/chemical	Assume required	Anytime hydrogen storage exceeded applicable limits	1-2 months	n/a	n/a	There is an exemption for hydrocarbon fuels used solely for workplace consumption as a fuel, if fuels are not part of a process containing another highly hazardous chemical covered by OSHA PSM. Hydrogen is not a hydrocarbon fuel and does not qualify for this exemption. The development time does not include the prevention program
USACE	Section 10/404 Permits	33 CFR 330	Section 10: Construction activities in navigable WOTUS Section 404: Fill or discharge in WOTUS	Assume not required	Construction	n/a	n/a	n/a	Project involves modification to existing unit. Permitting/compliance should already be in place.
State of Wyoming									
WDEQ- AQD	Air Construction Permit/Waiver	WAQSR - Chapter 6, Section 2	The construction of a new facility or modification of an existing facility or source.	Assume required	Construction	2 Months	3-6 Months	$500 + $75 per hour fee for processing	The Project must first obtain a construction permit, modification, or waiver authorizing the proposed change made to the operation of the facility. In this case, it is anticipated that the turbines on-site will be operating on a hydrogen/natural gas blend. This will likely require a permit as condition (F6)(d) of the current operating permit for the facility states that the combustion turbines shall be limited to pipeline natural gas as a fuel. Under Chapter 6, Section 2(k) of the Wyoming Air Quality Standards and Regulations (WAQSR), exemptions from obtaining an approval to construct or modify are listed. This list does not include an exemption for the use of an alternate fuel. Further, it must be determined whether the proposed change to the project would be considered a major modification as defined under Chapter 6, Section 4(a). If it is a major modification, this will significantly impact the complexity of the

Green Hydrogen Feasibility									
Agency	**Permits, Plans, or Approvals**	**Regulatory Citation**	**Regulated Activity**	**Required for Project**	**Applicable Project Phase**	**Application Development Time**	**Agency Expected Review Time**	**Fees**	**Additional Comments**
									application and time before a permit is obtained. Likely will be at least one year from application filing date to obtain permit if modification is major. If any additional emitting equipment will need to be installed for the purpose of green hydrogen production, this equipment must be included in the construction permit and counted towards the facility emissions total so long as an exemption does not exist under Ch 6, Sec 2(k) of the WAQSR.
WDEQ- AQD	Air Operating Permit	WAQSR - Chapter 6, Section 3	The operation of any emissions source with potential emissions that exceed that major source threshold.	Assume required	Operation	2 Months	5-9 Months, depending on whether modification is minor or significant	Annual fee of $34.50 per ton of emissions	If the Project is required to obtain a construction permit, then by Chapter 6, Section 3(c)(i)(B) of the WAQSR, the Project must also apply for an operating permit within twelve (12) months after commencing operation. The Project already has an active operating permit so this application would be filed as a modification to the existing operating permit. Per Chapter 6, Section 3(d)(vi), a permit modification is any revision to an operating permit that cannot be accomplished by an administrative permit amendment under Chapter 6, Section 3(d)(v). It does not appear that the revision would qualify for an administrative amendment, but it must be determined whether the modification would be considered minor or significant. The criteria for a minor permit modification is listed under Chapter 6, Section 3 (d)(vi)(A)(I) and the criteria for a significant permit modification is listed under Chapter 6, Section 3(d)(vi)(C)(I). Under Chapter 6, Section 3(d)(ii), the Project should be operating in compliance with the rules so long as an operating permit is submitted by the 12-month deadline.
WDEQ- WQD	WYPDES Industrial Storm Water General Permit	WDEQ Water Quality Chapter 2	A General Permit is required for stormwater discharges from facility operations	Assume not required	Operation	n/a	n/a	n/a	Project involves modification to existing unit. Permitting/compliance should already be in place.
WDEQ- WQD	Small Wastewater System Permit	WDEQ Water Quality Chapter 2	Permit is required for the installation, repair, or replacement of small wastewater systems (septic tanks/leach fields)	Assume not required	Construction	n/a	n/a	n/a	Assume existing system will treat wastewater.
WDEQ- WQD	WYPDES Small Construction General Permit	WDEQ Water Quality Chapter 2	Discharge of storm water runoff from construction that disturb at least 1 acre but less than 5 acres	Assume required	Construction	1 month	1-2 months	See Fee Schedule: https://wywaste.wyo.gov/calc/wypdesfeecalc.html	Site disturbance should not be larger than five acres so construction activities should be covered under the Small Permit.
WDEQ- WQD	WYPDES General Permit for Temporary Discharge	WDEQ Water Quality Chapter 2	Discharge of construction dewatering hydrostatic test waters, pump tests of water wells, etc.	Assume not required	Construction	n/a	n/a	n/a	Assume not required.
State Engineer's Office (SEO)	Permit to Appropriate Ground Water	WDEQ Water Quality Chapter 2	Approval to withdraw water for industrial uses, including dewatering.	Assume not required	Construction	n/a	n/a	n/a	Assume not required. Water will be withdrawn from potable water system.
SEO	Permit to Appropriate Surface Water	WDEQ Water Quality Chapter 2	Approval to withdraw water for industrial uses.	Assume not required	Construction	n/a	n/a	n/a	Assume not required. Water will be withdrawn from potable water system.
WDEQ- WQD	Underground Storage Tank Notification and Registration	WDEQ Storage Tanks Chapter 1	Notification and registration underground storage tanks	Assume required	Operation	2-4 weeks	1-2 months	n/a	Installation of above and underground storage tanks is anticipated. Notify WDEQ 30 days prior to installing, modifying, or closing tank. WDEQ will schedule onsite inspection.
WDEQ	Notification of Aboveground Storage Tank	WDEQ Storage Tanks Chapter 1	Storage, dispensage, and use of flammable or combustible liquids in aboveground tanks	Assume required	Operation	2-4 weeks	1-2 months	n/a	Installation of above and underground storage tanks is anticipated. Notify WDEQ 30 days prior to installing, modifying, or closing tank. WDEQ will schedule onsite inspection.

Green Hydrogen Feasibility									
Agency	**Permits, Plans, or Approvals**	**Regulatory Citation**	**Regulated Activity**	**Required for Project**	**Applicable Project Phase**	**Application Development Time**	**Agency Expected Review Time**	**Fees**	**Additional Comments**
WDOT	Oversized/Overweight Permit	WDOT Code	All loads over legal size or weight limits entering the state must obtain approval through this permit	Assume required	Construction	1 month	1-2 months	TBD	Will be obtained by heaving hauling contractors.
Wyoming Department of Game and Fish (WDG&F)	State Endangered Species Act - Biological Opinion	Wyoming Game and Fish Commission Regulations Code	Confirmation of no impacts to threatened and endangered species.	Assume not required	Construction	n/a	n/a	n/a	Project involves modification to existing unit. Permitting/compliance should already be in place.
Wyoming Department of State Parks and Cultural Resources (WDSP&CR) / State Historic Preservation Office (SHPO)	Section 106 Review / Cultural Resources Survey	Wyoming State Parks & Cultural Resources Department Code	Confirmation of no impacts to any cultural or archaeological resources.	Assume not required	Construction	n/a	n/a	n/a	Project involves modification to existing unit. Permitting/compliance should already be in place.
State Fire Marshal	Fire Safety Approval	Wyoming State Code	Installation of fire protection system and approval of project for commercial operation.	Assume required	Operation	2-4 weeks	1-2 months	n/a	May defer to County Fire Warden. Modifications may need to be approved for fire safety.
Laramie County									
Laramie County	Pre-Application Meeting	Laramie County Planning and Development Office	Required before submittal of any development application to the County office.	Assume required	Construction	n/a	n/a	n/a	Call (307) 775-7451 to schedule a Pre–Application Meeting. County will identify all permits/applications needed for the project.
Laramie County	Zone Change Application	Laramie County Planning and Development Office	Zoning approval required if a proposed project does not comply with the site's current designated use	Assume not required	Construction	n/a	n/a	n/a	Project involves modification to existing unit. Permitting/compliance should already be in place.
Laramie County	Commercial Permit	Laramie County Planning and Development Office	Required for new, additional, or renovations to commercial buildings	Assume required	Construction	1 month	1-2 months	Refer to Fee Schedule: https://www.laramiecountywy.gov/_departments/PlanningDevelopment/_pdfs/2021/building%20permit%20fee%20schedule%20120621.pdf	Project could qualify for revision to existing building permit. https://www.laramiecountywy.gov/_departments/PlanningDevelopment/_pdfs/2022/Commerical-New,%20Addition,%20Renovation.pdf
Laramie County	Commercial Wastewater System Permit	Laramie County Health Department	All small wastewater systems must be permitted prior to installation, repair, or modification	Assume not required	Operation	n/a	n/a	n/a	Assume existing system will treat wastewater.
Laramie County	Temporary Use Permit	Laramie County Planning and Development Office	Required for temporary construction trailers	Assume required	Construction	1 month	1-2 months	$100	Construction trailers will be utilized. https://www.laramiecountywy.gov/_departments/planningdevelopment/_pdfs/2022/Temporary%20Use%20Permit.pdf
Laramie County	Sign Permit	Laramie County Planning and Development Office	Required for any sign	Assume not required	Construction	n/a	n/a	n/a	Assume not required unless sign is erected on site.
Laramie County	Demolition Permit	Laramie County Planning and Development Office	Required for any demolition work	Assume required	Construction	1 month	1-2 months	$100	https://www.laramiecountywy.gov/_departments/PlanningDevelopment/_pdfs/2022/Demolition%20for%20Commerical%20and.or%20Residential%20App%206.15.22.pdf
Laramie County	Access Permit	Laramie County Public Works Department	Required for roadwork access construction for new or modified driveway	Assume required	Construction	1-2 weeks	1 month	$50	Must be obtained prior to building construction. https://www.laramiecountywy.gov/_departments/publicworks/_pdfs/2021/Access%20Permit%20Application%20Effective%207.20.21%20Fillable.pdf

Green Hydrogen Feasibility									
Agency	**Permits, Plans, or Approvals**	**Regulatory Citation**	**Regulated Activity**	**Required for Project**	**Applicable Project Phase**	**Application Development Time**	**Agency Expected Review Time**	**Fees**	**Additional Comments**
Laramie County	Road Construction Permit	Laramie County Public Works Department	Required for road and culvert construction	Assume required	Construction	1-2 weeks	1 month	TBD	https://www.laramiecountywy.gov/_departments/publicworks/_pdfs/2016/Access%20Drive-Utility-Road%20Const%20%20Permit.pdf
Laramie County	Oversized/Overweight Permit	Laramie County Public Works Department	Operation of oversize and overweight loads on Laramie County Roads	Assume required	Construction	1-2 weeks	1 month	TBD	https://www.laramiecountywy.gov/_departments/publicworks/_pdfs/2022/Oversize-Overweight%20Permit.pdf
Laramie County	Floodplain Development Permit	Laramie County Planning and Development Office	Required for development in a floodplain	Assume not required	Construction	n/a	n/a	n/a	Project involves modification to existing unit. Permitting/compliance should already be in place.
Laramie County	Environmental and Services Impact Report	Laramie County Planning and Development Office	Required to be submitted with a preliminary plat application and should be a thorough assessment of the impacts of the proposed project	Assume required	Construction	1 month	1-2 months	n/a	May be required if pre-development meeting decides a preliminary plat application is necessary for project. https://www.laramiecountywy.gov/_departments/PlanningDevelopment/_pdfs/2021/eisr.pdf
Laramie County	Grading, Erosion and Sediment Control Permit	Laramie County Planning and Development Office	A Standard GESC Permit is required for all land-disturbing activities that disturb 1 acre or more of land. Redevelopment activities that disturb less than 1 acre require a Standard GESC Permit	Assume required	Construction	1 month	1-2 months	n/a	https://www.laramiecountywy.gov/_departments/PlanningDevelopment/_pdfs/2019/NEW_GESC_APP_PKG_2019_LCLUR.pdf

Acronyms

AQD - Air Quality Department
CAAA - Clean Air Act Amendments of 1990
CFR - Code of Federal Regulations
USACE - US Army Corps of Engineers
EA - Environmental Assessment
EIS - Environmental Impact Statement
EPA - Environmental Protection Agency
FAA - Federal Aviation Administration
GESC - Grading and Erosion Sediment Control
NEPA - National Environmental Policy Act
NOI - Notice of Intent
NSR - New Source Review
OCA - Off-site Consequence Analysis
OSHA - Occupational Safety and Health Administration
PSM - Process Safety Management
SEO - State Engineer's Office
SHPO - State Historic Preservation Office
SPCC - Spill Prevention, Control and Countermeasure
SWPPP - Stormwater Pollution Prevention Plan
RMP - Risk Management Plan
ROW - Right-of-Way
TBD - to be determined
USFWS - US Fish and Wildlife Service
WAQSR - Wyoming Air Quality Standards and Regulations
WDEQ - Wyoming Department of Environmental Quality
WDG&F - Wyoming Department of Game & Fish
WDOT - Wyoming Department of Transportation
WDSP&CR - Wyoming Department of State Park & Cultural Resources
WOTUS - Waters of the United States
WQD - Water Quality Department
WYPDES- Wyoming Pollutant Discharge Elimination System

Appendix F. Schedule

Activity ID	Activity Name	Original Duration	Start	Finish
Black Hills CPGS Hydrogen Production Project - Temporary Test Burn using Hydrogen		360	02-Jan-25	10-Jun-26
Milestones		360	02-Jan-25	10-Jun-26
M.000A.001	NTP	0	02-Jan-25	
M.000A.002	Constructability Review	0		30-Jan-25
M.000A.003	HAZOP Review	0		06-Feb-25
M.000A.004	Construction Team Mobilize to Site	0	11-Feb-26	
M.000A.005	Substantial Completion	0		10-Jun-26
Engineering		275	02-Jan-25	10-Feb-26
Permitting		205	11-Apr-25	10-Feb-26
E.000A.001	Permit Submission	40	11-Apr-25	06-Jun-25
E.000A.002	Permit Approvals/Waiver	165	09-Jun-25	10-Feb-26
Process Engineering/Design		145	02-Jan-25	28-Jul-25
E.000A.003	Process Description & BEDD	15	02-Jan-25	23-Jan-25
E.000A.006	Process Equipment List	25	02-Jan-25	06-Feb-25
E.000A.007	Process Equipment Datasheets	20	02-Jan-25	30-Jan-25
E.000A.009	Performance Testing Requirements	15	02-Jan-25	23-Jan-25
E.000A.010	Permitting Technical Support for Emission Modeling	20	02-Jan-25	30-Jan-25
E.000A.004B	PFDs/H&MBs - Final	10	02-Jan-25	15-Jan-25
E.000A.008	Process Instrument Datasheets	20	16-Jan-25	13-Feb-25
E.000A.004A	PFDs/H&MBs - Prelim	20	24-Jan-25	20-Feb-25
E.000A.005	P&IDs	110	21-Feb-25	28-Jul-25
Equipment		130	02-Jan-25	07-Jul-25
E.000A.011	Mechanical Equipment Datasheets/Equipment Technical Specifications	25	02-Jan-25	06-Feb-25
E.000A.012	Vendor Proposal Review/Alignment	40	07-Feb-25	03-Apr-25
E.000A.013	Vendor Drawing Review	65	04-Apr-25	07-Jul-25
Civil		45	07-Feb-25	10-Apr-25
E.000A.015	Stuctural Drawings - Final	40	07-Feb-25	03-Apr-25
E.000A.017	Foundation Drawings - Final	40	07-Feb-25	03-Apr-25
E.000A.014	Stuctural Drawings -Prelim	20	14-Mar-25	10-Apr-25
E.000A.016	Foundation Drawings - Prelim	20	14-Mar-25	10-Apr-25
Piping		155	16-Jan-25	25-Aug-25
E.000A.018B	Plot Plan / Equipment Layouts - Final	15	16-Jan-25	06-Feb-25
E.000A.020	Isometric Drawings	55	07-Feb-25	24-Apr-25
E.000A.018A	Plot Plan / Equipment Layouts - Prelim	15	21-Feb-25	13-Mar-25
E.000A.019	3D Modeling	115	14-Mar-25	25-Aug-25
Electrical		150	31-Jan-25	02-Sep-25
E.000A.021A	Electrical Load List - Prelim	15	31-Jan-25	20-Feb-25
E.000A.022A	Electrical One-Line Diagram - Prelim	15	31-Jan-25	20-Feb-25
E.000A.024	Schematics & Wiring Diagrams	55	07-Feb-25	24-Apr-25
E.000A.023	Plan Drawings	90	11-Apr-25	18-Aug-25
E.000A.021B	Electrical Load List - Final	25	29-Jul-25	02-Sep-25
E.000A.022B	Electrical One-Line Diagram - Final	25	29-Jul-25	02-Sep-25
I&C		150	16-Jan-25	18-Aug-25
E.000A.025B	Control System Architecture Diagram - Final	30	16-Jan-25	27-Feb-25
E.000A.025A	Control System Architecture Diagram - Prelim	15	24-Jan-25	13-Feb-25
E.000A.026A	Instrument Index - Prelim	35	21-Feb-25	10-Apr-25
E.000A.027	Instrument Drawings	80	11-Apr-25	04-Aug-25
E.000A.026B	Instrument Index - Final	15	29-Jul-25	18-Aug-25
Procurement		210	07-Feb-25	04-Dec-25
P.000A.001	Delivered Gas Hydrogen RFP/Award	40	07-Feb-25	03-Apr-25
P.000A.002	Delivered Gas Hydrogen Fab/Deliver To Site	170	04-Apr-25	04-Dec-25
Construction		85	11-Feb-26	10-Jun-26
C.000A.001	U/G Trenching	35	11-Feb-26	31-Mar-26
C.000A.002	Foundations	30	11-Feb-26	24-Mar-26
C.000A.003	Equipment	30	04-Mar-26	14-Apr-26
C.000A.004	Piping	35	25-Mar-26	12-May-26
C.000A.005	Electrical / I&C	25	08-Apr-26	12-May-26
C.000A.006	Startup / Commissioning	35	22-Apr-26	10-Jun-26

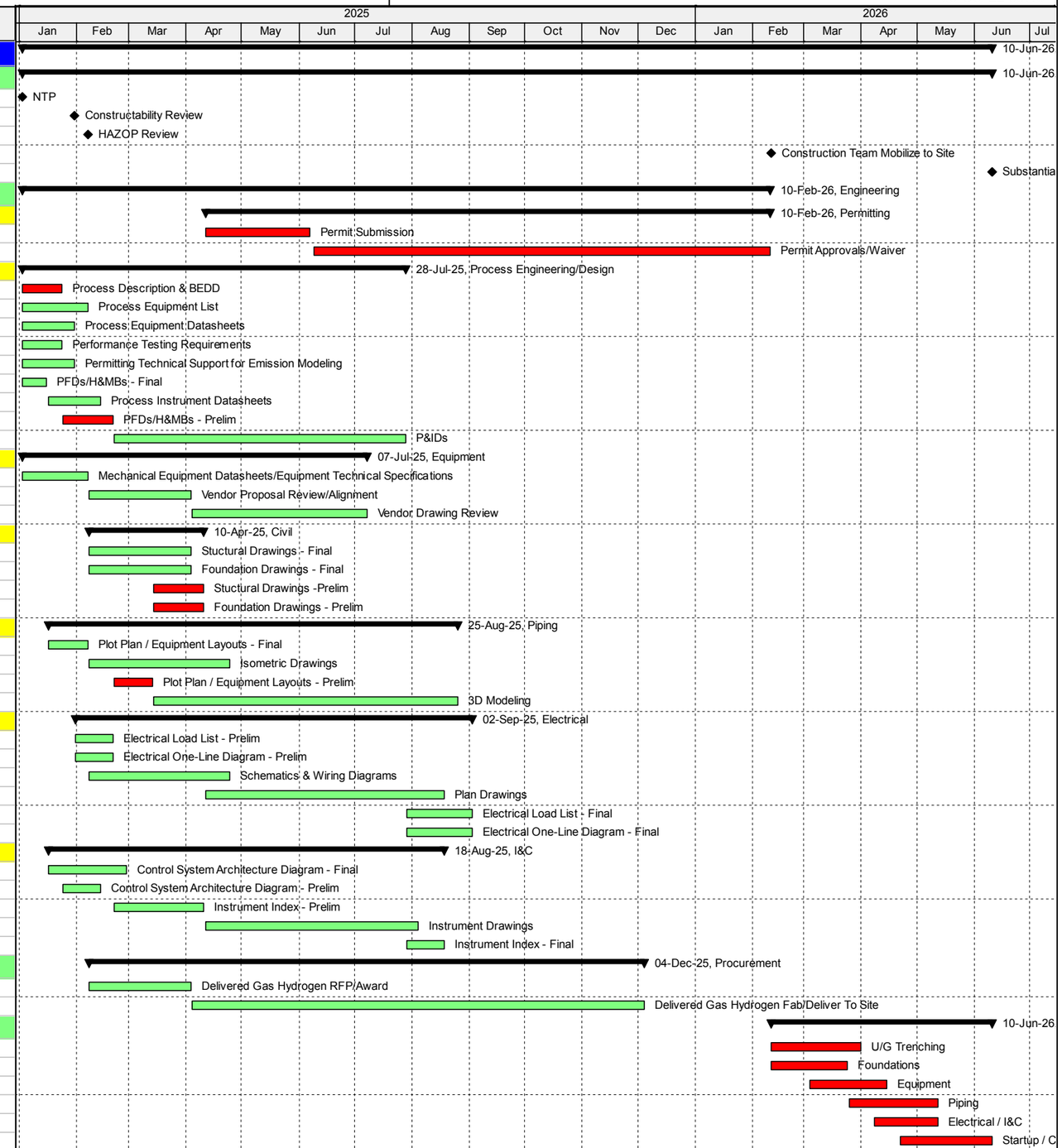

Actual Work | Critical Remaining Work | Summary
Remaining Work | Milestone

Activity ID	Activity Name	Original Duration	Start	Finish
Black Hills CPGS Hydrogen Production Project - Blue Hydrogen (SMR)		472	02-Jan-25	17-Nov-26
Milestones		472	02-Jan-25	17-Nov-26
M.000A.001	NTP	0	02-Jan-25*	
M.000A.002	Constructability Review	0		27-Jan-25*
M.000A.003	Award SMR	0	02-Apr-25*	
M.000A.004	HAZOP Review	0		28-May-25*
M.000A.005	Construction Team Mobilize to Site	0	02-Feb-26*	
M.000A.006	Substantial Completion	0		17-Nov-26
Engineering		268	02-Jan-25	30-Jan-26
Permitting		205	02-Apr-25	30-Jan-26
E.000A.001	Permit Submission	40	02-Apr-25	28-May-25
E.000A.002	Permit Approvals	165	29-May-25	30-Jan-26
Process Engineering/Design		150	02-Jan-25	04-Aug-25
E.000A.003	Process Description & BEDD	15	02-Jan-25	23-Jan-25
E.000A.006	Process Equipment List	25	02-Jan-25	06-Feb-25
E.000A.007	Process Equipment Datasheets	20	02-Jan-25	30-Jan-25
E.000A.009	Performance Testing Requirements & Procedures for SMR RFP	15	02-Jan-25	23-Jan-25
E.000A.004B	PFDs/H&MBs - Final	10	02-Jan-25	15-Jan-25
E.000A.008	Process Instrument Datasheets	20	16-Jan-25	13-Feb-25
E.000A.004A	PFDs/H&MBs - Prelim	20	24-Jan-25	20-Feb-25
E.000A.005	P&IDs	115	21-Feb-25	04-Aug-25
E.000A.010	Permitting Technical Support for Emission Modeling	20	02-Apr-25	29-Apr-25
Equipment		130	02-Jan-25	07-Jul-25
E.000A.011	Mechanical Equipment Datasheets/Equipment Technical Specifications	25	02-Jan-25	06-Feb-25
E.000A.012	Vendor Proposal Review/Alignment	45	31-Jan-25	03-Apr-25
E.000A.013	Vendor Drawing Review	65	04-Apr-25	07-Jul-25
Civil		50	29-May-25	07-Aug-25
E.000A.015	Stuctural Drawings - Final	20	29-May-25	25-Jun-25
E.000A.017	Foundation Drawings - Final	40	29-May-25	24-Jul-25
E.000A.014	Stuctural Drawings -Prelim	20	12-Jun-25	10-Jul-25
E.000A.016	Foundation Drawings - Prelim	40	12-Jun-25	07-Aug-25
Piping		145	30-Apr-25	21-Nov-25
E.000A.019	Plot Plan / Equipment Layouts - Final	15	30-Apr-25	20-May-25
E.000A.018	Plot Plan / Equipment Layouts - Prelim	15	21-May-25	11-Jun-25
E.000A.021	Isometric Drawings	55	21-May-25	07-Aug-25
E.000A.020	3D Modeling	115	12-Jun-25	21-Nov-25
Electrical		158	28-Jan-25	09-Sep-25
E.000A.022	Electrical Load List - Prelim	15	28-Jan-25	17-Feb-25
E.000A.024	Electrical One-Line Diagram - Prelim	15	28-Jan-25	17-Feb-25
E.000A.026	Plan Drawings	88	08-Apr-25	11-Aug-25
E.000A.027	Schematics & Wiring Diagrams	54	29-May-25	13-Aug-25
E.000A.023	Electrical Load List - Final	25	05-Aug-25	09-Sep-25
E.000A.025	Electrical One-Line Diagram - Final	25	05-Aug-25	09-Sep-25
I&C		155	16-Jan-25	25-Aug-25
E.000A.029	Control System Architecture Diagram - Final	30	16-Jan-25	27-Feb-25
E.000A.028	Control System Architecture Diagram - Prelim	15	24-Jan-25	13-Feb-25
E.000A.030	Instrument Index - Prelim	35	18-Feb-25	07-Apr-25
E.000A.032	Instrument Drawings	80	08-Apr-25	30-Jul-25
E.000A.031	Instrument Index - Final	15	05-Aug-25	25-Aug-25
Procurement		285	04-Feb-25	26-Mar-26
P.000A.001	SMR RFP/Award	40	04-Feb-25	31-Mar-25
P.000A.002	Hydrogen Compressor RFP/Award	40	04-Feb-25	31-Mar-25
P.000A.003	Hydrogen Storage RFP/Award	40	04-Feb-25	31-Mar-25
P.000A.005	Hydrogen Compressor Fab/Deliver to Site	200	01-Apr-25	22-Jan-26
P.000A.006	Hydrogen Storage Fab/Deliver to Site	245	01-Apr-25	26-Mar-26
P.000A.004	SMR Fab/Deliver to Site	235	02-Apr-25	13-Mar-26
Construction		297	08-Jul-25	15-Sep-26
C.000A.003	Equipment	70	08-Jul-25	14-Oct-25

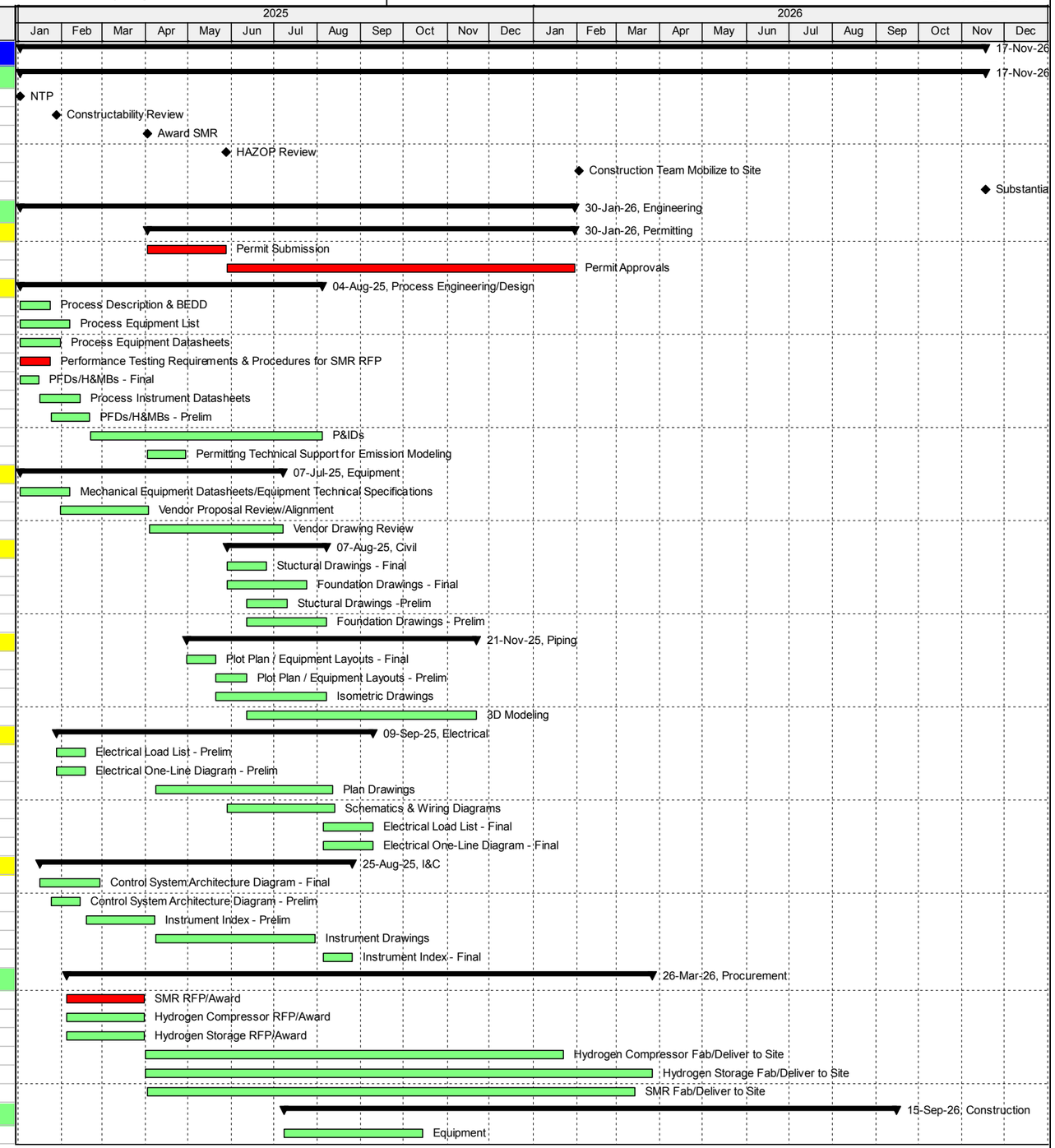

Actual Work | Critical Remaining Work | Summary
Remaining Work | Milestone

Activity ID	Activity Name	Original Duration	Start	Finish
C.000A.001	U/G Trenching	55	02-Feb-26	17-Apr-26
C.000A.002	Foundations	75	02-Feb-26	15-May-26
C.000A.004	Piping	75	27-Mar-26	13-Jul-26
C.000A.005	Electrical / I&C	75	27-Mar-26	13-Jul-26
C.000A.006	Startup / Commissioning	45	14-Jul-26	15-Sep-26

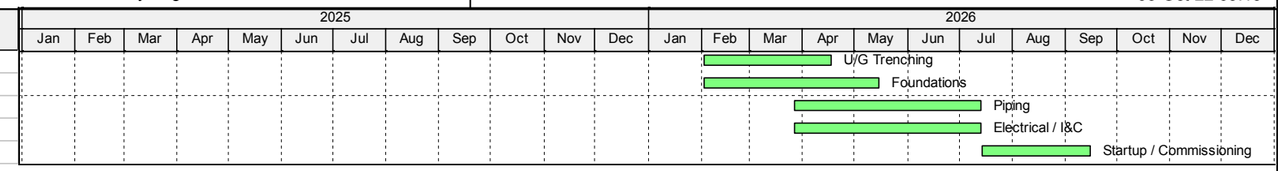

Actual Work | Critical Remaining Work | Summary
Remaining Work | Milestone

Activity ID	Activity Name	Original Duration	Start	Finish
Black Hills CPGS Hydrogen Production Project - Green Hydrogen (Electrolysis)		388	02-Jan-25	21-Jul-26
Milestones		388	02-Jan-25	21-Jul-26
M.000A.001	NTP	0	02-Jan-25*	
M.000A.002	Constructability Review	0		23-Jan-25*
M.000A.003	Award Electrolysis	0	02-Apr-25*	
M.000A.004	HAZOP Review	0		28-May-25*
M.000A.005	Construction Team Mobilize to Site	0	16-Feb-26*	
M.000A.006	Substantial Completion	0		21-Jul-26
Engineering		278	02-Jan-25	13-Feb-26
Permitting		215	02-Apr-25	13-Feb-26
E.000A.001	Permit Submission	40	02-Apr-25	28-May-25
E.000A.002	Permit Approvals	175	29-May-25	13-Feb-26
Process Engineering/Design		135	02-Jan-25	14-Jul-25
E.000A.003	Process Description & BEDD	15	02-Jan-25	23-Jan-25
E.000A.004A	PFDs/H&MBs - Prelim	20	02-Jan-25	30-Jan-25
E.000A.006	Process Equipment List	25	02-Jan-25	06-Feb-25
E.000A.007	Process Equipment Datasheets	15	02-Jan-25	23-Jan-25
E.000A.009	Performance Testing Requirements & Procedures for Electrolysis RFP	15	02-Jan-25	23-Jan-25
E.000A.005	P&IDs	110	07-Feb-25	14-Jul-25
E.000A.010	Permitting Technical Support for Emission Modeling	20	02-Apr-25	29-Apr-25
E.000A.004B	PFDs/H&MBs - Final	10	30-Apr-25	13-May-25
E.000A.008	Process Instrument Datasheets	20	14-May-25	11-Jun-25
Equipment		135	02-Jan-25	14-Jul-25
E.000A.011	Mechanical Equipment Datasheets/Equipment Technical Specifications	25	02-Jan-25	06-Feb-25
E.000A.012	Vendor Proposal Review/Alignment	45	07-Feb-25	10-Apr-25
E.000A.013	Vendor Drawing Review	65	11-Apr-25	14-Jul-25
Civil		118	21-Feb-25	07-Aug-25
E.000A.014	Stuctural Drawings -Prelim	20	21-Feb-25	20-Mar-25
E.000A.016	Foundation Drawings - Prelim	20	21-Feb-25	20-Mar-25
E.000A.015	Stuctural Drawings - Final	40	12-Jun-25	07-Aug-25
E.000A.017	Foundation Drawings - Final	40	12-Jun-25	07-Aug-25
Piping		148	31-Jan-25	28-Aug-25
E.000A.018A	Plot Plan / Equipment Layouts - Prelim	15	31-Jan-25	20-Feb-25
E.000A.019	3D Modeling	115	21-Feb-25	04-Aug-25
E.000A.018B	Plot Plan / Equipment Layouts - Final	10	14-May-25	28-May-25
E.000A.020	Isometric Drawings	55	12-Jun-25	28-Aug-25
Electrical		153	24-Jan-25	28-Aug-25
E.000A.021A	Electrical Load List - Prelim	15	24-Jan-25	13-Feb-25
E.000A.022A	Electrical One-Line Diagram - Prelim	15	24-Jan-25	13-Feb-25
E.000A.023	Plan Drawings	90	04-Apr-25	11-Aug-25
E.000A.024	Schematics & Wiring Diagrams	55	12-Jun-25	28-Aug-25
E.000A.021B	Electrical Load List - Final	25	15-Jul-25	18-Aug-25
E.000A.022B	Electrical One-Line Diagram - Final	25	15-Jul-25	18-Aug-25
I&C		135	24-Jan-25	04-Aug-25
E.000A.025A	Control System Architecture Diagram - Prelim	15	24-Jan-25	13-Feb-25
E.000A.026A	Instrument Index - Prelim	35	14-Feb-25	03-Apr-25
E.000A.027	Instrument Drawings	80	04-Apr-25	28-Jul-25
E.000A.025B	Control System Architecture Diagram - Final	30	14-May-25	25-Jun-25
E.000A.026B	Instrument Index - Final	15	15-Jul-25	04-Aug-25
Procurement		290	07-Feb-25	07-Apr-26
P.000A.001	Electrolysis RFP/Award	30	07-Feb-25	20-Mar-25
P.000A.002	Hydrogen Compressor RFP/Award	40	14-Feb-25	10-Apr-25
P.000A.003	Hydrogen Storage RFP/Award	40	14-Feb-25	10-Apr-25
P.000A.004	Electrolysis Fab/Deliver to Site	200	02-Apr-25	23-Jan-26
P.000A.005	Hydrogen Compressor Fab/Deliver to Site	190	11-Apr-25	20-Jan-26
P.000A.006	Hydrogen Storage Fab/Deliver to Site	245	11-Apr-25	07-Apr-26
Construction		110	16-Feb-26	21-Jul-26
C.000A.001	U/G Trenching	55	16-Feb-26	01-May-26

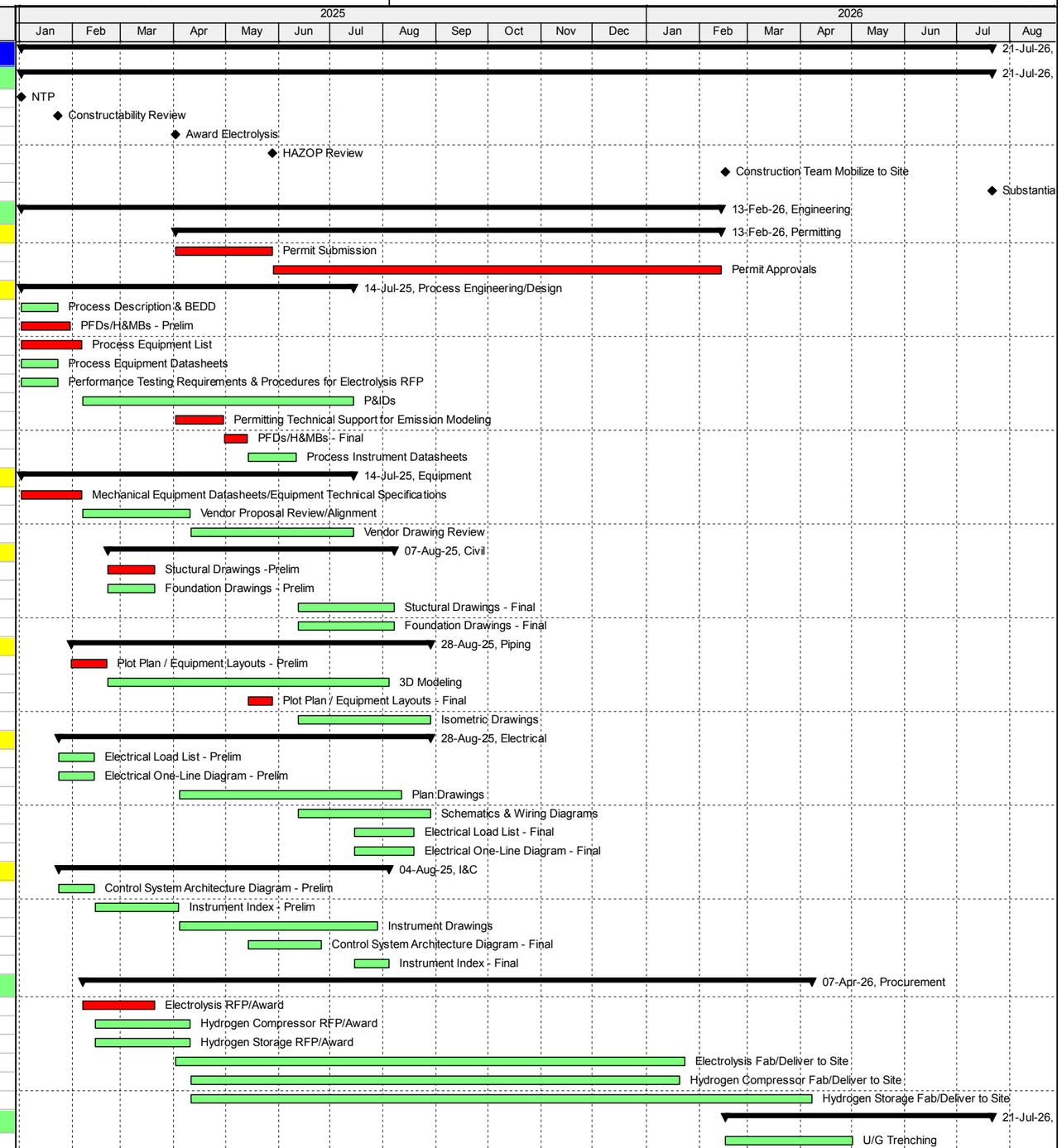

Actual Work | Critical Remaining Work | Summary
Remaining Work | Milestone

Activity ID	Activity Name	Original Duration	Start	Finish
C.000A.002	Foundations	75	16-Feb-26	01-Jun-26
C.000A.003	Equipment	70	16-Feb-26	22-May-26
C.000A.004	Piping	75	16-Feb-26	01-Jun-26
C.000A.005	Electrical / I&C	75	16-Feb-26	01-Jun-26
C.000A.006	Startup / Commissioning	35	02-Jun-26	21-Jul-26

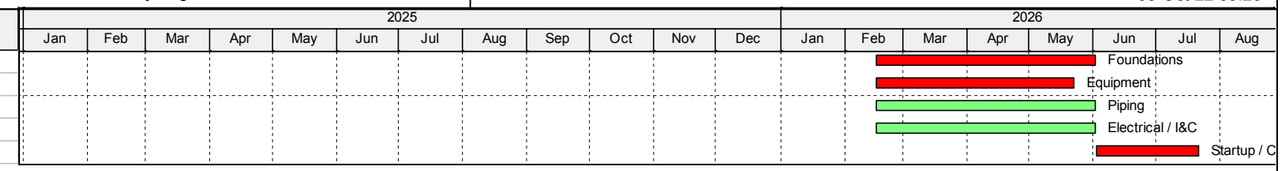

Actual Work | Critical Remaining Work | Summary
Remaining Work | Milestone